Addendum D

Pellet Boiler System

- BPS proposal.
- Signed contract with BPS for $375,000 and copies of invoices and checks/payments.
- BPS invoice and check for $50,400 related to piping.
- Biomass Commodities Corp. agreement.
- Minutes approving Biomass Commodities Corp. agreement.

BONNETTE, PAGE & STONE CORPORATION
91 BISSON AVENUE, LACONIA, NH 03246
TEL: 603. 524. 3411 FAX: 603. 524. 4641

General Contractors, Construction Managers for Design/Build of Public and Private Buildings

December 9, 2011

County of Carroll
Office of the Commissioners
95 Water Village Road, PO Box 152
Ossipee, NH 03864

Re: Proposed Renovation and support work for the pellet boiler system

Dear Commissioners,

In response to your recent advertisement, the following is our lump sum proposal for the construction of support area for the pellet boiler equipment that the county has purchased from Biomass Commodities Corporation at the old nursing home facility.

We have spoken with the design engineer McGill Engineering and EGA to develop the attached and the proposal is based upon using the same major subcontractors that performed the mechanical and electrical system work for the new nursing home. Due to the complexity of getting the boiler plants / heating systems all working together the team believes that it is in the best interest of the County to maintain the same major subs to complete this project. It will also maintain a consistent warranty for their work on the system between both the new and existing systems. We have included the Davis Bacon wage rates posted 5/20/11 and will provide the certified payrolls to verify same as the work progresses.

A summary of the work is as follows:

Our proposal is based upon the following summary of drawings that are attached hereto:
CTI sequence of operation dated 7/8/11 as issued by McGill Engineering
Drawings SKM2A,SKM2B, and SKM2C by EGA & McGill Engineering dated 7/8/11
Also drawing SKAB1 by EGA dated 7/1/10

Pellet Boiler Support work:

- Supervision and oversight of the project
- Coordination and project meetings with the owner's designers and staff.
- Daily clean up with disposal in dumpsters provided by owner.
- Safety provisions to maintain compliant work site
- Patch paving and finishes at the silo pad
- Misc equipment pads
- Cut and patch as needed for pellet tubes and equipment
- Cut and patch floor for in ground piping
- Misc carpentry for the roof penetrations / stacks

- Doors, frames & hardware
- Fire sealants and patching of existing boiler area walls
- Asbestos tile abatement allowance of $ 3500 is included.
- Prep boiler room floor and apply a colored stain finish
- F & I a new fire extinguisher for the boiler room
- Minor sprinkler modifications to existing heads at the boiler room area
- Mechanical & Electrical services per the attached scopes of work from Consolidated Electric and Denron Mechanical. (these scope were discussed and reviewed with McGill Engineering)

For the lump sum amount of : **$ 375,000.00**

Clarifications to the above:

- This proposal assumes that all permitting is by others
- Any emissions permitting if required shall be by others ✓
- Davis Bacon wage rates and certified payrolls are included as posted 5/20/11
- All design fees are excluded and shall be by others
- All commissioning if required shall be by others
- The owner shall be responsible for any required contingency monies
- An allowance is included to remove the asbestos floor tile at the boiler room area
- The costs of all under ground piping between facilities was completed prior and is separate from this proposal.
- Design costs / Biomass Commodities Pellet Boiler equipment all provided by the owner
- Vibration Isolation / none included or required
- Boilers, silos, fuel feed system (including piping), ash removal system, cyclone vent system, boiler operating and safety controls (including control panels), all associated accessories and boiler control wiring, shall be 100% completed by the owners equipment supplier.
- Boiler / silo start-up & owner training shall be by the owners equipment supplier.

Should you have questions or require additional information please do not hesitate to contact us. If the above meets with your approval please sign and return so that we may schedule the work required.

Sincerely,
Bonnette, Page & Stone Corp.

Randall J. Rennick
President

Accepted By : _____ Date: _____

CONTROL TECHNOLOGIES
Putting You in Control

MOUNTAIN VIEW NURSING HOME
Wood Pellet Plant & Bldg Boilers
Sequence of Operation
(Reviewed/approved by McGill Engineering 7/8/11)

1.0 Wood Pellet Boiler Plant

The Wood Pellet Boilers must be enabled manually or via an enable command from the DDC system and only then are the boilers fired manually initially under operator-observed start. Pump P-3 is interlocked to run whenever either Wood Boiler is enabled & P-3 runs continuously. Wood Boiler Pumps BP-1 & BP-2 are interlocked to run whenever their associated Wood Boiler is enabled. The Wood Pellet Boiler Plant is designed to provide the primary source of heat for the new building and as the new building head load is satisfied, the Wood Pellet Boiler Plant pumps redirect heating water to attempt to satisfy the original building heating load. The new building boilers provide back-up heating if the Wood Pellet Boiler Plant is not in service or the Wood Pellet Boiler Plant is not able to maintain the demand for heat in the new building. The original building boilers will provide second, third, etc. stage operation to maintain the heat demand in the original building if the residual heating capacity of the Wood Pellet Boiler Plant is not meeting the heating demand of the original building after satisfying primary heat to the new building.

The lead Wood Boiler must receive a continuous enable signal to provide heat according to the desired sequence. Wood Boiler plant lead/lag source selection is performed by the BM300/ BM500 control panels. Wood Boiler lead/lag selection can be based off manual operator selection or automatically based on boiler load conditions as selected from the HOA switches at the BM300 & BM500 control panels.

The Wood Boiler Plant BM300/BM500 controls modulate the firing rates & stage the wood pellet boilers to maintain the common wood boilers header injection loop supply temperature setpoint of 200 degF (adj). Heating pump P3 maintains constant circulation in the Wood Boiler Plant common header injection loop. The Wood Boiler Plant controls modulate the firing rate to operate at 10-100% to maintain +5degF above to -5degF below setpoint of the common header injection loop supply temperature sensor. The wood boiler sequencing control sequences the lag wood boiler (lag boiler must be in idle mode) on when the common header supply temperature falls 5 degF below setpoint with the lead boiler firing at 100%. A timing delay (adj) will be incorporated to prevent unnecessary staging of the lag wood boiler. This timing delay will depend on the observed load response and demand conditions of the building. Once the lag wood boiler is commanded to be modulated from idle, the lag boiler will modulate its firing rate from 10-100% to maintain the common header injection loop temperature at -10degF below setpoint.

2.0 Building Injection Heating Pumps P-1 (Serves Original Building) & P-2 (Serves New Building)

Heating pump P-2 is enabled & its VFD speed is varied to maintain the heating system return water temperature setpoint of the new building whenever the Wood Pellet Boiler Plant is enabled and either wood boiler has been lit and heat available status is confirmed. As the new building's return water temperature falls below the HWR temperature setpoint (New Building HWS temperature reset setpoint minus 15degF), the pump P-2 VFD speed increases from minimum speed to 100% to maintain the HWR temperature setpoint. In the event the new building HWR setpoint remains below setpoint for 15 minutes (adj) after pump P-2 VFD is commanded to 100% speed, then the new building boilers are staged as required to maintain the HWR temperature setpoint with a HWS high temperature limit setpoint per the new building's HWS reset control sequence as described below.

CONTROL TECHNOLOGIES
Putting You in Control

Heating pump P-1 VFD's speed is varied inversely from 100% speed to minimum speed as heating pump P-2 VFD's speed varies from minimum speed to 100%. When heating pump P-2 is operating at 100% speed, the Wood Boiler Plant is intended to provide heating to the new building only and no heating to the original building. In this mode, the original building boilers are sequenced to maintain original building's heating system HW supply temperature reset setpoint (140°F water at 60°F O.A.T. to 200°F water at 0°F O.A.T.). As the new building's HWR temperature setpoint is satisfied and pump P-2 VFD's speed is ramped down, heating pump P-1 VFD's speed increases injecting hot water from the Wood Boiler Plant into the heating system water loop in the original building. If the original building's return water temperature rises to its HWR temperature setpoint (Original Building HWS temperature reset setpoint minus 15degF), the original building's boilers are staged off if running in sequence and the pump P-1 VFD speed signal is overridden & ramped down to maintain the original building's HWR temperature setpoint. When the original building HWR setpoint remains below setpoint and the pump P-1 override has been released for 15 minutes (adj), then the original building boilers are staged as required to maintain the HWR temperature setpoint with a HWS high temperature limit setpoint per the original building's HWS reset control schedule.

BTU meter is provided on the P-1 heating water injection loop and on the P-2 heating water injection loop for monitoring and energy usage totalization to each building from the Wood Pellet Boiler Plant.

3.0 New Building Boiler Sequencing and Hot Water Supply Reset Control

A. Heating Boiler 1 and 2, relocated exiting Boiler 3, (future) Boiler 4 and associated circulators will be set up for back-up staged operation based on the common hot water supply header temperature. Pumps will continue to operate for 2 minutes (adj.) after end of associated boiler cycle for post cycle heat purge. Boilers will be alternated weekly (adj.). Boilers will be operated as required to maintain the following hot water reset schedule:
   1. The temperature of the common boiler hot water supply will be varied on an inverse straight line ratio with outdoor air temperature; namely, as outdoor air temperature rises, the hot water temperature being delivered will gradually reduce and vice-versa. Reset schedule will be: 140°F water at 60°F O.A.T. to 200°F water at 0°F O.A.T.
   2. Heating boilers (and primary heating pumps) will be automatically enabled/disabled at an operator-selected outdoor air temperature (set initially at 75°F).
   3. When enabled through the DDC system, domestic hot water heating Boiler 5 and associated circulator will operate to maintain setpoint (140°F) in storage tanks. Whenever (primary) hot water heating boiler/circulator are unavailable, domestic hot water will be generated using heating system boiler(s) with (backup) plate heat exchanger and boiler/storage tank side circulators. Furnish switch to manually disable primary system, reset heating system supply temperature setpoint to 180°F(adj.) and enable backup system to maintain storage tank temperatures.
   4. Alarm a boiler failure.

4.0 PUMP CONTROL

A. This Contractor will furnish a VFD complete with 5% impedance input line reactors to operate heating pumps P1 and P2 in parallel. Lead pump designation will be automatically alternated monthly. When heating is enabled through the DDC system, the lead pump will start and ramp up to speed required to satisfy supply to return differential pressure setpoint necessary to achieve flow in all terminals. (REMOTE sensor location and setpoint to be

CONTROL TECHNOLOGIES
Putting You in Control

determined with input from engineer during system balancing.) Lag pump will start and ramp up similarly as required to maintain system differential setpoint. If lead pump fails, power will automatically switch to standby pump and an alarm will be generated.

B. Domestic Hot Water Recirculating Pump Control: Tempered and 140°F system pumps will be enabled to run per 24 hour/7 day schedule established through the DDC system.

C. Alarm a pump failure.

5.0 COMBUSTION AIR/VENT CONTROL

A. Automatic control damper in combustion air intake shall be sequenced to open whenever either wood boiler is enabled to fire. Whenever boiler room temperature exceeds 80F (adj.), ACD's in combustion air intake and vent openings shall open. Both openings are subject to seasonally adjusted manual volume dampers as shown. Should boiler room temperature fall to 40F (adj.), combustion air damper shall close to 5% open until temperature recovers. Should boiler room temperature remain below 40F (adj.) for over 15 minutes, dampers shall go to 0% open and an alarm shall be generated thru the building automation system.

PRELIMINARY - for discussion 2017.03.31

PUMP SCHEDULE

UNIT NO.	MANUFACTURER MODEL NUMBER (AS STANDARD)		SYSTEM SERVED	GPM	HEAD	FLUID TEMP. °F	MOTOR		ELECTRICAL DATA			STARTER	CONTROL	REMARKS
							HP	RPM	VOLTS	PH	CY			
P1	TACO	KV4007	PRIMARY TO EXIST.	273	15'	180	1.5	1160	208	3	60	VFD (BY ATC)	PER ATC SPEC.	1
P2	TACO	FI3007	PRIMARY TO NEW	273	40'	180	5	1750	208	3	60	VFD (BY ATC)	PER ATC SPEC.	1
P3	TACO	KV4009	BOILER SECONDARY	273	30'	180	3	1160	208	3	60	MAGNETIC W/ HOA	PER ATC SPEC.	1
BP1	TACO	1400-60	BOILER 1 BYPASS	30	14'	180	1/6	3450	120	1	60	SENTINEL SW	PER ATC SPEC.	
BP2	TACO	1615	BOILER 2 BYPASS	52	30'	180	3/4	1750	208	3	60	MAGNETIC W/ HOA	PER ATC SPEC.	

1 FURNISH WITH PREMIUM EFFICIENCY INVERTER RATED MOTOR.

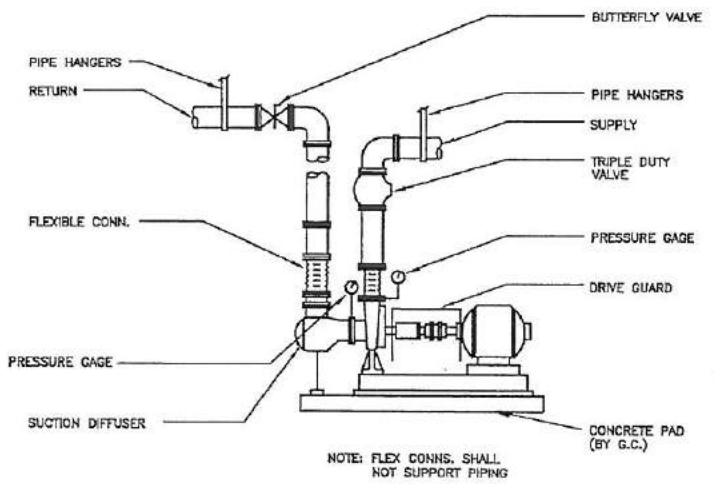

PD9 BASE MOUNTED PUMP PIPING DETAIL NTS

EGA ARCHITECTS

MOUNTAIN VIEW NURSING HOME
OSSIPEE, NH

Date: 07/08/11
Project #: 09003X
Scale: 1/8" = 1'-0"

Sheet Revised: —

Sketch Number: SKM2A
1 OF 3

PRELIMINARY - for discussion 2017.03.31

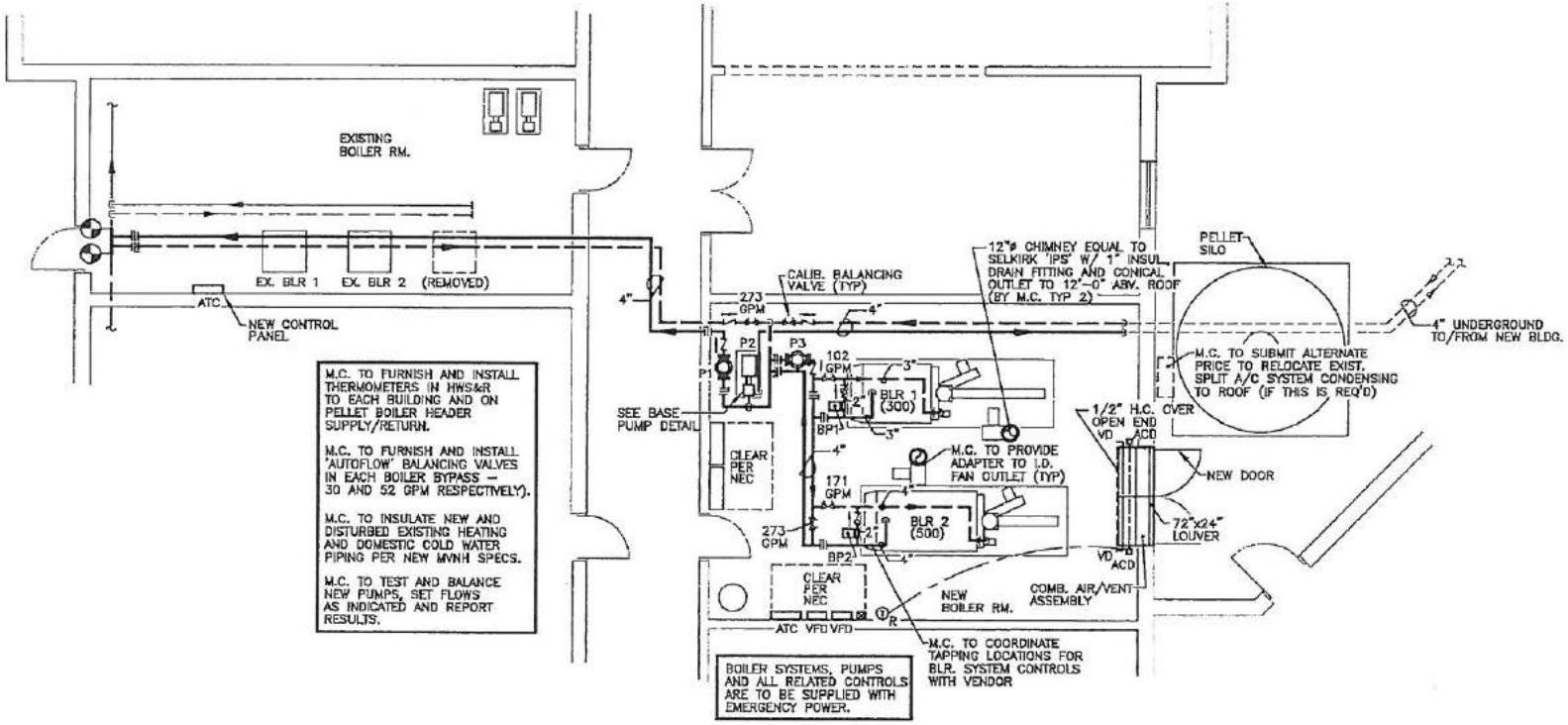

PARTIAL FLOOR PLAN – MECHANICAL
SCALE: 1/8" =1'-0"

EGA ARCHITECTS

MOUNTAIN VIEW NURSING HOME
OSSIPEE, NH

Date:	07/08/11
Project #:	09003X
Scale:	1/8" = 1'-0"
Sheet Revised:	—
Sketch Number:	SKM2B 2 OF 3

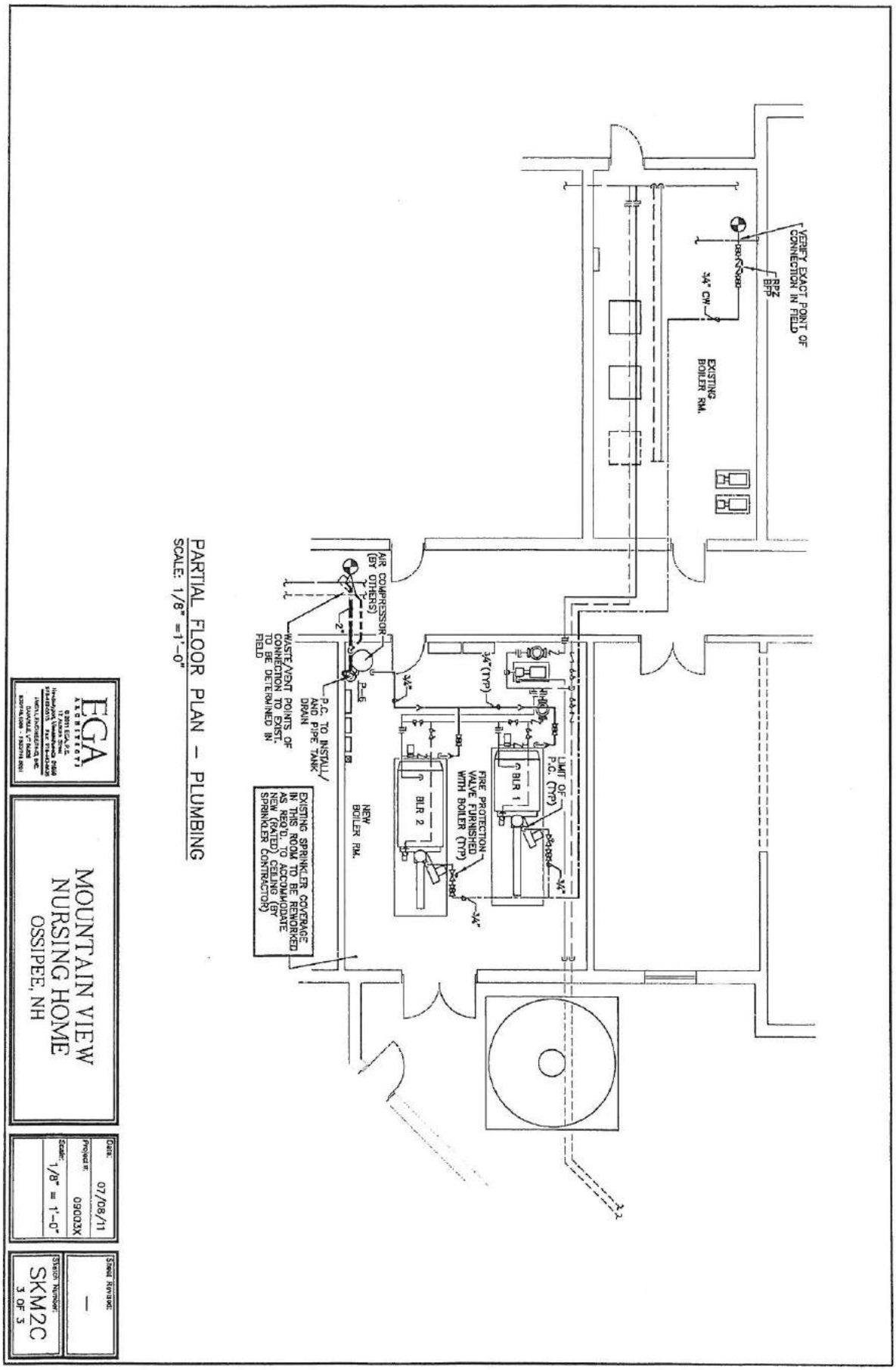

PARTIAL FLOOR PLAN – PLUMBING

SCALE: 1/8" =1'-0"

EGA ARCHITECTS

MOUNTAIN VIEW NURSING HOME

OSSIPEE, NH

Date: 07/08/11

Project #: 09003X

Scale: 1/8" = 1'-0"

Sheet Revised: —

Sheet Number: SKM2C

3 OF 3

PRELIMINARY - for discussion 2017.03.31

NOTES:
1. EXISTING LIGHTING TO BE RE-INSTALLED AT NEW CEILING.
2. PROVIDE 4" HOUSEKEEPING PADS AT ALL NEW EQUIPMENT.
3. ALL CONSTRUCTION TO BE DEMOLISHED TO BE REMOVED IN ITS ENTIRETY.
4. NEW CONSTRUCTION AND PATCHING TO BE OF THE SAME FINISH AND WORKMANSHIP AS ADJACENT EXISTING CONSTRUCTION.

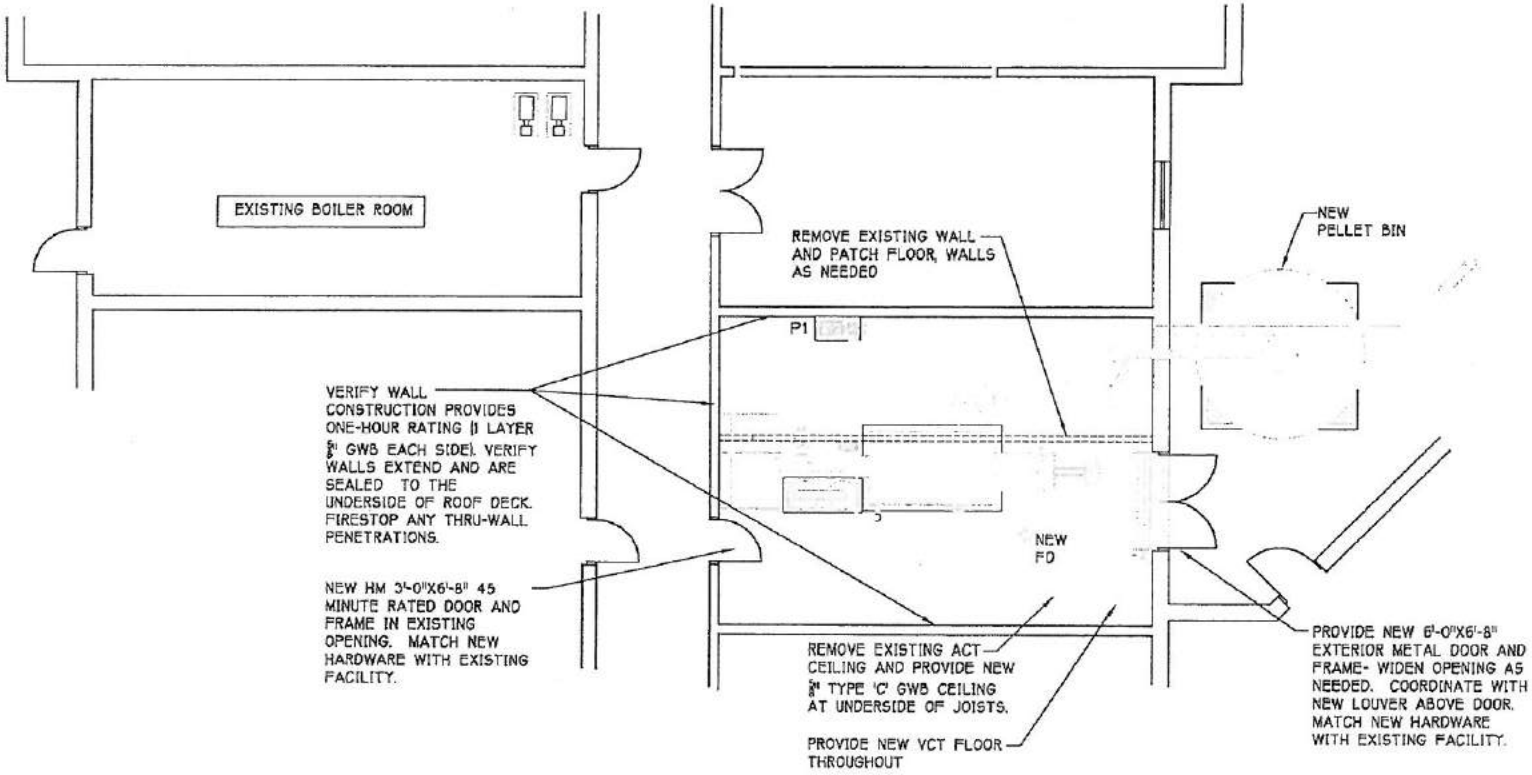

1 **MAINTENANCE ROOM- EXISTING FACILITY**
1/8" = 1'-0"

EGA ARCHITECTS
© 2006 EGA, P.C.
12 Auburn Street
Newburyport, MA 01950
978.462.5515
Fax: 978.462.5525

MOUNTAIN VIEW NURSING HOME
Ossipee, NH

NEW PELLET BOILER EQUIPMENT ROOM

DATE:	07/01/10
REV. #:	–
PROJ. #:	200903
SCALE:	1/8"=1'-0"
SHEET REVISED	
DWG. NUMBER	SKA-B1

CONSOLIDATED ELECTRIC · NH

COMMERCIAL & INDUSTRIAL ELECTRICAL CONTRACTORS

MOUNTAIN VIEW NURSING HOME

BIO MASS PLANT SPACE DEVELOPMENT

TO PROVIDE MATERIALS AND LABOR FOR ELECTRICAL WORK AS LISTED IN THE FOLLOWING EQUIPMENT CONNECTION OUTLINE

- ONE 200 AMP 3PH. 4 W. FEEDER TO PANEL BP-1
- ONE 200 AMP. 250 VOLT 3PH 4 W 42 CIRC.PANEL WITH REQUIRED BREAKERS
- TWO BOILER CONTROL PANEL POWER FEEDER AND CONNECTION
- ONE CAT 6 DATA CABLE FROM EACH BOILER CONTROL PANEL TO SERVER RACK
- ONE POWER CONNECTION TO FRESH AIR DAMPER WITH RA T'STAT (FBO)
- ONE POWER CIRC./ CONNECTION FOR 1 – 5 HP PUMP AND VFD (FBO)
- ONE POWER CIRC. / CONNECTION FOR 1-11/2 HP PUMP AND VFD (FBO)
- ONE POWER CIRC. / CONNECTION FOR 1-3 HP PUMP AND MAG STARTER
- ONE POWER CIRC. / CONNECTION FOR 1-3/4 HP PUMP AND MAG STARTER
- ONE POWER CIRC. / CONNECTION FOR 1-1/6 HP PUMP WITH MS SWITCH
- ONE POWER CIRC. / CONNECTION FOR 1-5HP AIR COMPRESSOR PACKAGE
- FIVE INDUSTRIAL SHADE LIGHTING FIXTURES W/ 3 WAY SWITCHING AND CIRCUIT
- TWO EXIT SIGNS WITH BATTERY SUPPORT CONNECTED AT LINE SIDE OF LIGHT CIRC.
- ONE EMERGENCY BATTERY UNIT CONNECTED TO LINE SIDE OF LIGHT CIRC.
- FIVE GENERAL PURPOSE RECEPTACLE AND CIRCUIT, ONE WILL BE LOCATED AT EXTERIOR FOR SERVICE TO SILO AREA
- ONE EXTERIOR CFL WALL PACK WITH PHOTO CELL TO SERVE DOOR AND SILO AREA
- TEMP. CABLE CONNECTION AT MAIN SWBD. TO COMBINE TWO EXISTING 200 AMP FEEDERS AND CONNECT TO ONE EXISTING 200 AMP BREAKER ALLOWING THE SECOND 200 AMP BREAKER TO BE USED FOR BIO MASS PLANT FEEDER CIRC.
- AN ALLOWANCE OF 750.00 TO RELOCATE SPLIT AC SYSTEM IF REQUIRED
- REWORK / EXTEND AREA FIRE ALARM CIRCUITS TO ACCEPT BOILER ROOM DEVICES AS LISTED, 1- PULL STATION , 2- HEAT DETECTORS 200 DEG. , 2- HORN STROBES 15 CD , AND TESTING
- ELECTRICAL PERMIT
- CO-ORDINATION WITH OTHER TRADES
- POSTED RATES

NOTE, THIS DOES NOT INCLUDE CUTTING, PATCHING, PAINTING, FIRE CAULKING.
QUOTE IS BASED ON NORMAL WORK HOURS, PREMIUM TIME NOT INCLUDED.
ELECTRICAL WORK FROM BOILER CONTROL PANELS TO MOTORS AND CONTROL DEVICES ON BOILERS, HEAT LINES AND SILO ARE NOT INCLUDED.

Fred Charlton CEINH

Building Technology Services
7 Columbia Circle · Merrimack, NH 03054
(603) 423-9211 · Fax (603) 423-9092

CONTROL TECHNOLOGIES
Putting You in Control

Sales Quote: 1314 2-5737

Control Technologies, Inc.
70 Zachary Rd.
Manchester, NH 03109
Phone: (603)626-6070
FAX: (603)626-0352

Re: Mountain View WoodPellet Boiler ATC

Quote To: Joel Pickering - (Company: Denron Plbg & Htg)
FAX:

Quote Number: 1314 2-5737
Quote From: Paul Santini

Joel,

We quote to furnish the materials and perform the work to provide the added DDC controls in order to supplement the McGill Engineering Sequence of Operation dated 7/8/11 and in accordance with its attached SKM-2A, 2B & 2C dated 7/8/11 and as described below for the net price of:

This pricing includes:

1) Providing a DDC controller to enable the Woodchip Boiler and HW pumps P-1 & P-2 and control HW pumps P-1 & P-2 VFD per the Items 1, 2 & 5 of the sequence of operation. The Wood Boiler Plant BM Control Panel controls the wood pellet boilers, pumps BP-1 & BP-2 and injection pump P-3. The following DDC points are to be provided:

Analog Inputs:
1) HW return temp from existing bldg to Wood Pellet Boiler Plant
2) HW return temp from new bldg to Wood Pellet Boiler Plant;
3) Common HW injection loop return temp back to Wood Pellet Boilers.
4) Common HW injection loop supply temp from Wood Pellet Boilers
5) HW supply temp to the new building (Sensor is part of BTU meter for new bldg). ✓
6) HW supply temp to existing building (Sensor is part of BTU meter for existing bldg). ✓
7) Outside air temp (mapped from new building)
8) Boiler Room space temp

Analog Outputs:
1) P-1 VFD speed
2) P-2 VFD speed
3) Combustion Air Damper #1 command (0-10v)
4) Combustion Air Damper #2 command (0-10v)
5) HW supply flow GPM to new building (from BTU Meter)
6) HW supply flow GPM to existing building (from BTU Meter)

Digital Inputs:
1) Pump P-1 VFD CTS status
2) Pump P-2 VFD CTS status
3) Pump P-1 VFD alarm
4) Pump P-2 VFD alarm
5) Pump P-3 CTS status
6) Wood Pellet Boiler 1 General Alarm
7) Wood Pellet Boiler 2 General Alarm
8) Wood Boiler BP300 On/Off Status (Signals its Combustion Air Damper)
9) Wood Boiler BP500 On/Off Status (Signals its Combustion Air Damper)

Digital Outputs:
1) Pump P-1 On-Off
2) Pump P-2 On-Off
3) Wood Pellet Boilers enable

2) Furnish two (2) 36x24 combustion dampers. Provide damper actuators and interlock wiring between DDC System and Wood Pellet Control Panel

DENRON
PLUMBING AND HVAC LLC

Serving New England for more than 30 Years

605 Front Street, Manchester, NH 03102 • 603-627-4186 • Fax 603-627-0559

Bonnette Page & Stone Corporation
91 Bisson Avenue
Laconia, NH 03246

Attn: Jim Kimball
Re: Mountain View Nursing Home, Ossipee, New Hampshire / Wood Pellet Boiler Piping

Dear Jim,

Following is the cost impact to perform the plumbing & heating piping for the Wood Pellet Boiler System. Our pricing is based on the Sequence of Operation written by Control Technologies & SKM-2A, 2B, and 2C all dated 7/08/2011 as provided by McGill Engineering.

PLUMBING:

1. We will provide & install (1) P-6 floor drain & up to 30' of pipe (10' vertical, 10' drainage, 10' vent) to **existing sanitary and vent piping as shown**.
2. We will provide & install a 1" cold water line with rpz backflow preventer as shown. Fire protection valve(s) furnished with boiler.
3. We have carried the cost of (2) service technicians for 1-day to freeze the domestic cold water line and make the required connections to the existing water mains.
4. We have included copper tubing with soldered connections for the compressed air system. Air compressor and accessories assumed to be furnished and installed by others.
5. We have not included any chimney stack drainage piping if required.

HEATING:

1. We will provide & install the heating water piping 2-1/2" and larger with grooved fittings, trim, and specialties by Victaulic; piping 2" and smaller will be type "L" copper with soldered fittings.

2. We will provide & install (1) suction diffuser for the base mounted pump, and (3) multi-purpose valves for each of the P1~3 pumps.
3. Please review attached Control Technologies quote to clarify the extent of the controls that we have carried in this proposal.
4. We will provide & install the (2) prefabricated metal chimneys as specified & detailed.
5. Cutting/patching and support for installation of relocated condenser on roof by others.

EXCLUSIONS:

1. Demolition of any kind.
2. Concrete work of any description. This includes coring, saw cutting or jack hammering of floors or walls.
3. All cutting and patching including roof penetrations.
4. All excavation, backfill, compaction, de-watering, or pumping of trenches.
5. All power wiring or electrical work of any kind.
6. Denron is not responsible for the detection, abatement, or costs associated with hazardous materials.
7. Vibration isolation / none shown or specified.
8. Boilers, silo, fuel feed system (including piping), ash removal system, cyclone vent system, boiler operating & safety controls (including control panels), all associated accessories and boiler control wiring.
9. Boiler/silo start-up & owner training.
10. Permits of any kind.
11. New double outside doors.
12. New rated ceiling.
13. Sprinkler or fire protection work of any kind.
14. Disconnects.
15. Testing or repairing of any equipment provided by others.
16. Glycol

COPY

AIA® Document A105™ – 2007

Standard Form of Agreement Between Owner and Contractor for a Residential or Small Commercial Project

AGREEMENT made as of the 11th day of January in the year 2012
(In words, indicate day, month and year.)

BETWEEN the Owner:
(Name, legal status, address and other information)

County of Carroll
Office of Commissioners, Admin Building
95 Water Village Road, PO Box 152
Ossipee, NH 03864
Phone # 603-539-2428

and the Contractor:
(Name, legal status, address and other information)

Bonnette, Page & Stone Corp.
91 Bisson Avenue
Laconia, NH 03246
Phone # 603-524-3411

for the following Project:
(Name, location and detailed description)

MVNH Wood Pellet Boiler Room / Support Work
Carroll County Complex
Water Village Road
Ossipee, NH
Construction / renovation of space in the former Mountain View Nursing Home to accommodate new wood pellet boiler system equipment that is supplied by the owner.

The Architect:
(Name, legal status, address and other information)

EGA Architects
12 Auburn Street
Newburyport, Ma 01950
Phone # 978-462-5515

The Owner and Contractor agree as follows.

ADDITIONS AND DELETIONS:
The author of this document has added information needed for its completion. The author may also have revised the text of the original AIA standard form. An *Additions and Deletions Report* that notes added information as well as revisions to the standard form text is available from the author and should be reviewed. A vertical line in the left margin of this document indicates where the author has added necessary information and where the author has added to or deleted from the original AIA text.

This document has important legal consequences. Consultation with an attorney is encouraged with respect to its completion or modification.

State or local law may impose requirements on contracts for home improvements. If this document will be used for Work on the Owner's residence, the Owner should consult local authorities or an attorney to verify requirements applicable to this Agreement.

Init.
/
AIA Document A105™ – 2007 (formerly A105™ – 1993 and A205™ – 1993). Copyright © 1993 and 2007 by The American Institute of Architects. All rights reserved. WARNING: This AIA® Document is protected by U.S. Copyright Law and International Treaties. Unauthorized reproduction or distribution of this AIA® Document, or any portion of it, may result in severe civil and criminal penalties, and will be prosecuted to the maximum extent possible under the law. This document was produced by AIA software at 12:30:50 on 01/11/2012 under Order No.7647914374_1 which expires on 06/14/2012, and is not for resale.
User Notes:
(1433164087)

TABLE OF ARTICLES

1 THE CONTRACT DOCUMENTS

2 DATE OF COMMENCEMENT AND SUBSTANTIAL COMPLETION DATE

3 CONTRACT SUM

4 PAYMENT

5 INSURANCE

6 GENERAL PROVISIONS

7 OWNER

8 CONTRACTOR

9 ARCHITECT

10 CHANGES IN THE WORK

11 TIME

12 PAYMENTS AND COMPLETION

13 PROTECTION OF PERSONS AND PROPERTY

14 CORRECTION OF WORK

15 MISCELLANEOUS PROVISIONS

16 TERMINATION OF THE CONTRACT

17 OTHER TERMS AND CONDITIONS

ARTICLE 1 THE CONTRACT DOCUMENTS

§ 1.1 The Contractor shall complete the Work described in the Contract Documents for the Project. The Contract Documents consist of

.1 this Agreement signed by the Owner and Contractor;

.2 the drawings and specifications prepared by the Architect, dated , and enumerated as follows:

Drawings:

Number	Title	Date
See below		

Specifications:

Section	Title	Pages
See Below		

.3 addenda prepared by the Architect as follows:

Number	Date	Pages
See Below		

.4 written orders for changes in the Work issued after execution of this Agreement; and

AIA Document A105™ – 2007 (formerly A105™ – 1993 and A205™ – 1993). Copyright © 1993 and 2007 by The American Institute of Architects. All rights reserved. WARNING: This AIA® Document is protected by U.S. Copyright Law and International Treaties. Unauthorized reproduction or distribution of this AIA® Document, or any portion of it, may result in severe civil and criminal penalties, and will be prosecuted to the maximum extent possible under the law. This document was produced by AIA software at 12:30:50 on 01/11/2012 under Order No.7647914374_1 which expires on 08/14/2012, and is not for resale.
User Notes:

.5 other documents, if any, identified as follows:
This agreement is based upon the BPS proposal dated December 9, 2011. Copy of which is attached hereto.

ARTICLE 2 DATE OF COMMENCEMENT AND SUBSTANTIAL COMPLETION

The number of calendar days available to the Contractor to substantially complete the Work is the Contract Time. The date of commencement of the Work shall be the date of this Agreement unless otherwise indicated below. The Contractor shall substantially complete the Work, no later than one hundred twenty (120) calendar days from the date of commencement, subject to adjustment as provided in Article 10 and Article 11.
(Insert the date of commencement, if it differs from the date of this Agreement.)

ARTICLE 3 CONTRACT SUM

§ 3.1 Subject to additions and deductions in accordance with Article 10, the Contract Sum is:

Three hundred seventy fivr thousand dollars ($ 375,000.00)

§ 3.2 For purposes of payment, the Contract Sum includes the following values related to portions of the Work:
(Itemize the Contract Sum among the major portions of the Work.)

Portion of Work	Value
N/A	

§ 3.3 Unit prices, if any, are as follows:
(Identify and state the unit price; state the quantity limitations, if any, to which the unit price will be applicable.)

Item	Units and Limitations	Price per Unit ($0.00)
N/A		

§ 3.4 Allowances included in the Contract Sum, if any, are as follows:
(Identify allowance and state exclusions, if any, from the allowance price.)

Item	Price
Asbestos Abatement	$ 3,500.00

§ 3.5 The Contract Sum is based upon the following alternates, if any, which are described in the Contract Documents and hereby accepted by the Owner:
(State the numbers or other identification of accepted alternates. If the bidding or proposal documents permit the Owner to accept other alternates subsequent to the execution of this Agreement, attach a schedule of such other alternates showing the amount for each and the date when that amount expires.)

N/A

§ 3.6 The Contract Sum shall include all items and services necessary for the proper execution and completion of the Work.

ARTICLE 4 PAYMENT

§ 4.1 Based on Contractor's Applications for Payment certified by the Architect, the Owner shall pay the Contractor, in accordance with Article 12, as follows:
(Insert below timing for payments and provisions for withholding retainage, if any.)

The contractor shall invoice the owner on a monthly basis. Requisitions shall be submitted to the owner on or about the 25th of each month and payment shall be made by the 10th of the month following.

AIA Document A105™ – 2007 (formerly A105™ – 1993 and A205™ – 1993). Copyright © 1993 and 2007 by The American Institute of Architects. All rights reserved. WARNING: This AIA® Document is protected by U.S. Copyright Law and International Treaties. Unauthorized reproduction or distribution of this AIA® Document, or any portion of it, may result in severe civil and criminal penalties, and will be prosecuted to the maximum extent possible under the law. This document was produced by AIA software at 12:30:50 on 01/11/2012 under Order No.7647914374_1 which expires on 08/14/2012, and is not for resale.
User Notes:

§ 4.2 Payments due and unpaid under the Contract Documents shall bear interest from the date payment is due at the rate below, or in the absence thereof, at the legal rate prevailing at the place of the Project.

18 % per annum

ARTICLE 5 INSURANCE

§ 5.1 The Contractor shall provide Contractor's general liability and other insurance as follows:
(Insert specific insurance requirements and limits.)

Type of insurance	Limit of liability ($0.00)
Liability	$ 1,000,000.00 ea Occurance,
	$ 2,000,000.00 General Aggregate
Auto	$ 1,000,000.00 Each Accident
Umbrella	$ 5,000,000.00

§ 5.2 The Owner shall provide property insurance to cover the value of the Owner's property, including any Work provided under this Agreement. The Contractor is entitled to receive an increase in the Contract Sum equal to the insurance proceeds related to a loss for damage to the Work covered by the Owner's property insurance.

§ 5.3 The Contractor shall obtain an endorsement to its general liability insurance policy to cover the Contractor's obligations under Section 8.12.

§ 5.4 Each party shall provide certificates of insurance showing their respective coverages prior to commencement of the Work.

§ 5.5 Unless specifically precluded by the Owner's property insurance policy, the Owner and Contractor waive all rights against (1) each other and any of their subcontractors, suppliers, agents and employees, each of the other; and (2) the Architect, Architect's consultants and any of their agents and employees, for damages caused by fire or other causes of loss to the extent covered by property insurance or other insurance applicable to the Work.

ARTICLE 6 GENERAL PROVISIONS

§ 6.1 THE CONTRACT

The Contract represents the entire and integrated agreement between the parties and supersedes prior negotiations, representations or agreements, either written or oral. The Contract may be amended or modified only by a written modification in accordance with Article 10.

§ 6.2 THE WORK

The term "Work" means the construction and services required by the Contract Documents, and includes all other labor, materials, equipment and services provided, or to be provided, by the Contractor to fulfill the Contractor's obligations.

§ 6.3 INTENT

The intent of the Contract Documents is to include all items necessary for the proper execution and completion of the Work by the Contractor. The Contract Documents are complementary, and what is required by one shall be as binding as if required by all.

§ 6.4 OWNERSHIP AND USE OF ARCHITECT'S DRAWINGS, SPECIFICATIONS AND OTHER DOCUMENTS

Documents prepared by the Architect are instruments of the Architect's service for use solely with respect to this Project. The Architect shall retain all common law, statutory and other reserved rights, including the copyright. The Contractor, subcontractors, sub-subcontractors, and material or equipment suppliers are authorized to use and reproduce the instruments of service solely and exclusively for execution of the Work. The instruments of service may not be used for other Projects or for additions to this Project outside the scope of the Work without the specific written consent of the Architect.

ARTICLE 7 OWNER

§ 7.1 INFORMATION AND SERVICES REQUIRED OF THE OWNER

§ 7.1.1 If requested by the Contractor, the Owner shall furnish all necessary surveys and a legal description of the site.

Init. /

AIA Document A105™ – 2007 (formerly A105™ – 1993 and A205™ – 1993). Copyright © 1993 and 2007 by The American Institute of Architects. All rights reserved. WARNING: This AIA® Document is protected by U.S. Copyright Law and International Treaties. Unauthorized reproduction or distribution of this AIA® Document, or any portion of it, may result in severe civil and criminal penalties, and will be prosecuted to the maximum extent possible under the law. This document was produced by AIA software at 12:30:50 on 01/11/2012 under Order No.7647914374_1 which expires on 08/14/2012, and is not for resale.
User Notes: (1433164087)

§ 7.1.2 Except for permits and fees that are the responsibility of the Contractor under the Contract Documents, the Owner shall obtain and pay for other necessary approvals, easements, assessments and charges.

§ 7.2 OWNER'S RIGHT TO STOP THE WORK

If the Contractor fails to correct Work which is not in accordance with the Contract Documents, the Owner may direct the Contractor in writing to stop the Work until the correction is made.

§ 7.3 OWNER'S RIGHT TO CARRY OUT THE WORK

If the Contractor defaults or neglects to carry out the Work in accordance with the Contract Documents and fails within a seven day period after receipt of written notice from the Owner to commence and continue correction of such default or neglect with diligence and promptness, the Owner may, without prejudice to other remedies, correct such deficiencies. In such case, the Contract Sum shall be adjusted to deduct the cost of correction from payments due the Contractor.

§ 7.4 OWNER'S RIGHT TO PERFORM CONSTRUCTION AND TO AWARD SEPARATE CONTRACTS

§ 7.4.1 The Owner reserves the right to perform construction or operations related to the Project with the Owner's own forces, and to award separate contracts in connection with other portions of the Project.

§ 7.4.2 The Contractor shall coordinate and cooperate with the Owner's own forces and separate contractors employed by the Owner.

§ 7.4.3 Costs caused by delays or by improperly timed activities or defective construction shall be borne by the party responsible therefor.

ARTICLE 8 CONTRACTOR

§ 8.1 REVIEW OF CONTRACT DOCUMENTS AND FIELD CONDITIONS BY CONTRACTOR

§ 8.1.1 Execution of the Contract by the Contractor is a representation that the Contractor has visited the site, become familiar with local conditions under which the Work is to be performed and correlated personal observations with requirements of the Contract Documents.

§ 8.1.2 The Contractor shall carefully study and compare the Contract Documents with each other and with information furnished by the Owner. Before commencing activities, the Contractor shall (1) take field measurements and verify field conditions; (2) carefully compare this and other information known to the Contractor with the Contract Documents; and (3) promptly report errors, inconsistencies or omissions discovered to the Architect.

§ 8.2 CONTRACTOR'S CONSTRUCTION SCHEDULE

The Contractor, promptly after being awarded the Contract, shall prepare and submit for the Owner's and Architect's information a Contractor's construction schedule for the Work.

§ 8.3 SUPERVISION AND CONSTRUCTION PROCEDURES

§ 8.3.1 The Contractor shall supervise and direct the Work, using the Contractor's best skill and attention. The Contractor shall be solely responsible for and have control over construction means, methods, techniques, sequences and procedures, and for coordinating all portions of the Work.

§ 8.3.2 The Contractor, as soon as practicable after award of the Contract, shall furnish in writing to the Owner through the Architect the names of subcontractors or suppliers for each portion of the Work. The Contractor shall not contract with any subcontractor or supplier to whom the Owner or Architect have made a timely and reasonable objection.

§ 8.4 LABOR AND MATERIALS

§ 8.4.1 Unless otherwise provided in the Contract Documents, the Contractor shall provide and pay for labor, materials, equipment, tools, utilities, transportation, and other facilities and services necessary for proper execution and completion of the Work.

AIA Document A105™ – 2007 (formerly A105™ – 1993 and A205™ – 1993). Copyright © 1993 and 2007 by The American Institute of Architects. All rights reserved. WARNING: This AIA® Document is protected by U.S. Copyright Law and International Treaties. Unauthorized reproduction or distribution of this AIA® Document, or any portion of it, may result in severe civil and criminal penalties, and will be prosecuted to the maximum extent possible under the law. This document was produced by AIA software at 12:30:50 on 01/11/2012 under Order No.7647914374_1 which expires on 08/14/2012, and is not for resale.
User Notes:

(1433164087)

§ 8.4.2 The Contractor shall enforce strict discipline and good order among the Contractor's employees and other persons carrying out the Contract Work. The Contractor shall not permit employment of unfit persons or persons not skilled in tasks assigned to them.

§ 8.5 WARRANTY

The Contractor warrants to the Owner and Architect that: (1) materials and equipment furnished under the Contract will be new and of good quality unless otherwise required or permitted by the Contract Documents; (2) the Work will be free from defects not inherent in the quality required or permitted; and (3) the Work will conform to the requirements of the Contract Documents.

§ 8.6 TAXES

The Contractor shall pay sales, consumer, use and similar taxes that are legally required when the Contract is executed.

§ 8.7 PERMITS, FEES AND NOTICES

§ 8.7.1 The Contractor shall obtain and pay for the building permit and other permits and governmental fees, licenses and inspections necessary for proper execution and completion of the Work.

§ 8.7.2 The Contractor shall comply with and give notices required by agencies having jurisdiction over the Work. If the Contractor performs Work knowing it to be contrary to applicable laws, statutes, ordinances, codes, rules and regulations, or lawful orders of public authorities, the Contractor shall assume full responsibility for such Work and shall bear the attributable costs. The Contractor shall promptly notify the Architect in writing of any known inconsistencies in the Contract Documents with such governmental laws, rules and regulations.

§ 8.8 SUBMITTALS

The Contractor shall promptly review, approve in writing and submit to the Architect Shop Drawings, Product Data, Samples and similar submittals required by the Contract Documents. Shop Drawings, Product Data, Samples and similar submittals are not Contract Documents.

§ 8.9 USE OF SITE

The Contractor shall confine operations at the site to areas permitted by law, ordinances, permits, the Contract Documents and the Owner.

§ 8.10 CUTTING AND PATCHING

The Contractor shall be responsible for cutting, fitting or patching required to complete the Work or to make its parts fit together properly.

§ 8.11 CLEANING UP

The Contractor shall keep the premises and surrounding area free from accumulation of debris and trash related to the Work. At the completion of the Work, the Contractor shall remove its tools, construction equipment, machinery and surplus material; and shall properly dispose of waste materials.

§ 8.12 INDEMNIFICATION

To the fullest extent permitted by law, the Contractor shall indemnify and hold harmless the Owner, Architect, Architect's consultants and agents and employees of any of them from and against claims, damages, losses and expenses, including but not limited to attorneys' fees, arising out of or resulting from performance of the Work, provided that such claim, damage, loss or expense is attributable to bodily injury, sickness, disease or death, or to injury to or destruction of tangible property (other than the Work itself), but only to the extent caused by the negligent acts or omissions of the Contractor, a subcontractor, anyone directly or indirectly employed by them or anyone for whose acts they may be liable, regardless of whether or not such claim, damage, loss or expense is caused in part by a party indemnified hereunder.

ARTICLE 9 ARCHITECT

§ 9.1 The Architect will provide administration of the Contract as described in the Contract Documents. The Architect will have authority to act on behalf of the Owner only to the extent provided in the Contract Documents.

§ 9.2 The Architect will visit the site at intervals appropriate to the stage of construction to become generally familiar with the progress and quality of the Work.

Init.
/
AIA Document A105™ – 2007 (formerly A105™ – 1993 and A205™ – 1993). Copyright © 1993 and 2007 by The American Institute of Architects. All rights reserved. WARNING: This AIA® Document is protected by U.S. Copyright Law and International Treaties. Unauthorized reproduction or distribution of this AIA® Document, or any portion of it, may result in severe civil and criminal penalties, and will be prosecuted to the maximum extent possible under the law. This document was produced by AIA software at 12:30:50 on 01/11/2012 under Order No.7647914374_1 which expires on 08/14/2012, and is not for resale.
User Notes: (1433164087)

§ 9.3 The Architect will not have control over or charge of, and will not be responsible for, construction means, methods, techniques, sequences or procedures, or for safety precautions and programs in connection with the Work, since these are solely the Contractor's responsibility. The Architect will not be responsible for the Contractor's failure to carry out the Work in accordance with the Contract Documents.

§ 9.4 Based on the Architect's observations and evaluations of the Contractor's Applications for Payment, the Architect will review and certify the amounts due the Contractor.

§ 9.5 The Architect has authority to reject Work that does not conform to the Contract Documents.

§ 9.6 The Architect will promptly review and approve or take appropriate action upon Contractor's submittals, but only for the limited purpose of checking for conformance with information given and the design concept expressed in the Contract Documents.

§ 9.7 The Architect will promptly interpret and decide matters concerning performance under, and requirements of, the Contract Documents on written request from either the Owner or Contractor.

§ 9.8 Interpretations and decisions of the Architect will be consistent with the intent of and reasonably inferable from the Contract Documents and will be in writing or in the form of drawings. When making such interpretations and decisions, the Architect will endeavor to secure faithful performance by both Owner and Contractor, will not show partiality to either and will not be liable for results of interpretations or decisions rendered in good faith.

§ 9.9 The Architect's duties, responsibilities and limits of authority as described in the Contract Documents shall not be changed without written consent of the Owner, Contractor and Architect. Consent shall not be unreasonably withheld.

ARTICLE 10 CHANGES IN THE WORK

§ 10.1 The Owner, without invalidating the Contract, may order changes in the Work within the general scope of the Contract consisting of additions, deletions or other revisions, the Contract Sum and Contract Time being adjusted accordingly in writing. If the Owner and Contractor can not agree to a change in the Contract Sum, the Owner shall pay the Contractor its actual cost plus reasonable overhead and profit.

§ 10.2 The Architect will have authority to order minor changes in the Work not involving changes in the Contract Sum or the Contract Time and not inconsistent with the intent of the Contract Documents. Such orders shall be in writing and shall be binding on the Owner and Contractor. The Contractor shall carry out such orders promptly.

§ 10.3 If concealed or unknown physical conditions are encountered at the site that differ materially from those indicated in the Contract Documents or from those conditions ordinarily found to exist, the Contract Sum and Contract Time shall be subject to equitable adjustment.

ARTICLE 11 TIME

§ 11.1 Time limits stated in the Contract Documents are of the essence of the Contract.

§ 11.2 If the Contractor is delayed at any time in progress of the Work by changes ordered in the Work, or by labor disputes, fire, unusual delay in deliveries, unavoidable casualties or other causes beyond the Contractor's control, the Contract Time shall be subject to equitable adjustment.

ARTICLE 12 PAYMENTS AND COMPLETION

§ 12.1 CONTRACT SUM

The Contract Sum stated in the Agreement, including authorized adjustments, is the total amount payable by the Owner to the Contractor for performance of the Work under the Contract Documents.

§ 12.2 APPLICATIONS FOR PAYMENT

§ 12.2.1 At least ten days before the date established for each progress payment, the Contractor shall submit to the Architect an itemized Application for Payment for Work completed in accordance with the values stated in the Agreement. Such Application shall be supported by data substantiating the Contractor's right to payment as the Owner

Init.

/

AIA Document A105™ – 2007 (formerly A105™ – 1993 and A205™ – 1993). Copyright © 1993 and 2007 by The American Institute of Architects. All rights reserved. WARNING: This AIA® Document is protected by U.S. Copyright Law and International Treaties. Unauthorized reproduction or distribution of this AIA® Document, or any portion of it, may result in severe civil and criminal penalties, and will be prosecuted to the maximum extent possible under the law. This document was produced by AIA software at 12:30:50 on 01/11/2012 under Order No.7647914374_1 which expires on 08/14/2012, and is not for resale.

User Notes: (1433164087)

or Architect may reasonably require. Payments shall be made on account of materials and equipment delivered and suitably stored at the site for subsequent incorporation in the Work. If approved in advance by the Owner, payment may similarly be made for materials and equipment stored, and protected from damage, off the site at a location agreed upon in writing.

§ 12.2.2 The Contractor warrants that title to all Work covered by an Application for Payment will pass to the Owner no later than the time of payment. The Contractor further warrants that upon submittal of an Application for Payment, all Work for which Certificates for Payment have been previously issued and payments received from the Owner shall, to the best of the Contractor's knowledge, information and belief, be free and clear of liens, claims, security interests or other encumbrances adverse to the Owner's interests.

§ 12.3 CERTIFICATES FOR PAYMENT

The Architect will, within seven days after receipt of the Contractor's Application for Payment, either issue to the Owner a Certificate for Payment, with a copy to the Contractor, for such amount as the Architect determines is properly due, or notify the Contractor and Owner in writing of the Architect's reasons for withholding certification in whole or in part.

§ 12.4 PROGRESS PAYMENTS

§ 12.4.1 After the Architect has issued a Certificate for Payment, the Owner shall make payment in the manner provided in the Contract Documents.

§ 12.4.2 The Contractor shall promptly pay each subcontractor and supplier, upon receipt of payment from the Owner, an amount determined in accordance with the terms of the applicable subcontracts and purchase orders.

§ 12.4.3 Neither the Owner nor the Architect shall have responsibility for payments to a subcontractor or supplier.

§ 12.4.4 A Certificate for Payment, a progress payment, or partial or entire use or occupancy of the Project by the Owner shall not constitute acceptance of Work not in accordance with the requirements of the Contract Documents.

§ 12.5 SUBSTANTIAL COMPLETION

§ 12.5.1 Substantial Completion is the stage in the progress of the Work when the Work or designated portion thereof is sufficiently complete in accordance with the Contract Documents so the Owner can occupy or utilize the Work for its intended use.

§ 12.5.2 When the Work or designated portion thereof is substantially complete, the Architect will make an inspection to determine whether the Work is substantially complete. When the Architect determines that the Work is substantially complete the Architect shall prepare a Certificate of Substantial Completion that shall establish the date of Substantial Completion, shall establish the responsibilities of the Owner and Contractor, and shall fix the time within which the Contractor shall finish all items on the list accompanying the Certificate. Warranties required by the Contract Documents shall commence on the date of Substantial Completion of the Work or designated portion thereof unless otherwise provided in the Certificate of Substantial Completion.

§ 12.6 FINAL COMPLETION AND FINAL PAYMENT

§ 12.6.1 Upon receipt of a final Application for Payment, the Architect will inspect the Work. When the Architect finds the Work acceptable and the Contract fully performed, the Architect will promptly issue a final Certificate for Payment.

§ 12.6.2 Final payment shall not become due until the Contractor submits to the Architect releases and waivers of liens, and data establishing payment or satisfaction of obligations, such as receipts, claims, security interests or encumbrances arising out of the Contract.

§ 12.6.3 Acceptance of final payment by the Contractor, a subcontractor or material supplier shall constitute a waiver of claims by that payee except those previously made in writing and identified by that payee as unsettled at the time of final Application for Payment.

AIA Document A105™ – 2007 (formerly A105™ – 1993 and A205™ – 1993). Copyright © 1993 and 2007 by The American Institute of Architects. All rights reserved. WARNING: This AIA® Document is protected by U.S. Copyright Law and International Treaties. Unauthorized reproduction or distribution of this AIA® Document, or any portion of it, may result in severe civil and criminal penalties, and will be prosecuted to the maximum extent possible under the law. This document was produced by AIA software at 12:30:50 on 01/11/2012 under Order No.7647914374_1 which expires on 08/14/2012, and is not for resale.
User Notes:

(1433164087)

ARTICLE 13 PROTECTION OF PERSONS AND PROPERTY

The Contractor shall be responsible for initiating, maintaining and supervising all safety precautions and programs, including all those required by law in connection with performance of the Contract. The Contractor shall take reasonable precautions to prevent damage, injury or loss to employees on the Work, the Work and materials and equipment to be incorporated therein, and other property at the site or adjacent thereto. The Contractor shall promptly remedy damage and loss to property caused in whole or in part by the Contractor, or by anyone for whose acts the Contractor may be liable.

ARTICLE 14 CORRECTION OF WORK

§ 14.1 The Contractor shall promptly correct Work rejected by the Architect as failing to conform to the requirements of the Contract Documents. The Contractor shall bear the cost of correcting such rejected Work, including the costs of uncovering, replacement and additional testing.

§ 14.2 In addition to the Contractor's other obligations including warranties under the Contract, the Contractor shall, for a period of one year after Substantial Completion, correct work not conforming to the requirements of the Contract Documents.

§ 14.3 If the Contractor fails to correct nonconforming Work within a reasonable time, the Owner may correct it in accordance with Section 7.3.

ARTICLE 15 MISCELLANEOUS PROVISIONS

§ 15.1 ASSIGNMENT OF CONTRACT

Neither party to the Contract shall assign the Contract as a whole without written consent of the other.

§ 15.2 TESTS AND INSPECTIONS

§ 15.2.1 At the appropriate times, the Contractor shall arrange and bear cost of tests, inspections and approvals of portions of the Work required by the Contract Documents or by laws, statutes, ordinances, codes, rules and regulations, or lawful orders of public authorities.

§ 15.2.2 If the Architect requires additional testing, the Contractor shall perform those tests.

§ 15.2.3 The Owner shall bear cost of tests, inspections or approvals that do not become requirements until after the Contract is executed.

§ 15.3 GOVERNING LAW

The Contract shall be governed by the law of the place where the Project is located.

ARTICLE 16 TERMINATION OF THE CONTRACT

§ 16.1 TERMINATION BY THE CONTRACTOR

If the Architect fails to certify payment as provided in Section 12.3 for a period of 30 days through no fault of the Contractor, or if the Owner fails to make payment as provided in Section 12.4.1 for a period of 30 days, the Contractor may, upon seven additional days' written notice to the Owner and Architect, terminate the Contract and recover from the Owner payment for Work executed including reasonable overhead and profit, and costs incurred by reason of such termination.

§ 16.2 TERMINATION BY THE OWNER FOR CAUSE

§ 16.2.1 The Owner may terminate the Contract if the Contractor

- .1 repeatedly refuses or fails to supply enough properly skilled workers or proper materials;
- .2 fails to make payment to subcontractors for materials or labor in accordance with the respective agreements between the Contractor and the subcontractors;
- .3 persistently disregards laws, ordinances, or rules, regulations or orders of a public authority having jurisdiction; or
- .4 is otherwise guilty of substantial breach of a provision of the Contract Documents.

§ 16.2.2 When any of the above reasons exist, the Owner, after consultation with the Architect, may without prejudice to any other rights or remedies of the Owner and after giving the Contractor and the Contractor's surety, if any, seven days' written notice, terminate employment of the Contractor and may

Init.
/
AIA Document A105™ – 2007 (formerly A105™ – 1993 and A205™ – 1993). Copyright © 1993 and 2007 by The American Institute of Architects. All rights reserved. WARNING: This AIA® Document is protected by U.S. Copyright Law and International Treaties. Unauthorized reproduction or distribution of this AIA® Document, or any portion of it, may result in severe civil and criminal penalties, and will be prosecuted to the maximum extent possible under the law. This document was produced by AIA software at 12:30:50 on 01/11/2012 under Order No.7647914374_1 which expires on 08/14/2012, and is not for resale.
User Notes:
(1433164087)

.1 take possession of the site and of all materials thereon owned by the Contractor, and
.2 finish the Work by whatever reasonable method the Owner may deem expedient.

§ 16.2.3 When the Owner terminates the Contract for one of the reasons stated in Section 16.2.1, the Contractor shall not be entitled to receive further payment until the Work is finished.

§ 16.2.4 If the unpaid balance of the Contract Sum exceeds costs of finishing the Work, such excess shall be paid to the Contractor. If such costs exceed the unpaid balance, the Contractor shall pay the difference to the Owner. This obligation for payment shall survive termination of the Contract.

§ 16.3 TERMINATION BY THE OWNER FOR CONVENIENCE
The Owner may, at any time, terminate the Contract for the Owner's convenience and without cause. The Contractor shall be entitled to receive payment for Work executed, and costs incurred by reason of such termination, along with reasonable overhead and profit on the Work not executed.

ARTICLE 17 OTHER TERMS AND CONDITIONS
(Insert any other terms or conditions below.)

This agreement is based on the information provided in BPS proposal dated 12/9/11. Copy of which is attached to this agreement.

This Agreement entered into as of the day and year first written above.
(If required by law, insert cancellation period, disclosures or other warning statements above the signatures.)

David Sorensen

OWNER *(Signature)*

Carroll County Commissioners

DAVID SORENSEN
(Printed name, title and address)
CHAIR COMMISSIOR
1/11/2012

CONTRACTOR *(Signature)*
Randall J Remick, President
Bonnette, Page & Stone Corp
91 Bisson Ave
Laconia, NH
RANDALL J. REMICK, PRESIDENT
(Printed name, title and address)

AIA Document A105™ – 2007 (formerly A105™ – 1993 and A205™ – 1993). Copyright © 1993 and 2007 by The American Institute of Architects. All rights reserved. WARNING: This AIA® Document is protected by U.S. Copyright Law and International Treaties. Unauthorized reproduction or distribution of this AIA® Document, or any portion of it, may result in severe civil and criminal penalties, and will be prosecuted to the maximum extent possible under the law. This document was produced by AIA software at 12:30:50 on 01/11/2012 under Order No.7647914374_1 which expires on 08/14/2012, and is not for resale.
User Notes:

Init.
/

(1433164087)

PRELIMINARY - for discussion 2017.03.31

COUNTY of CARROLL
95 Water Village Road
P.O. Box 152
Ossipee, NH 03864-0152

TD Bank
New Hampshire

54-7
114

№ 031740

CHECK NO.
31740

DATE
1/13/2012

AMOUNT
$25,000.00

TWENTY-FIVE THOUSAND AND NO/100 DOLLARS

PAY TO THE ORDER OF

BONNETTE, PAGE & STONE CORPORATION
91 BISSON AVENUE
LACONIA, NH 03246

TREASURER

David Lorenson
COMMISSIONER

Dorothy Solomon
COMMISSIONER

⑈031740⑈ ⑆011400071⑆ 9242046012⑈

COUNTY of CARROLL 95 Water Village Road P.O. Box 152 Ossipee NH 03864-0152

VENDOR BONNETTE, PAGE & STONE CORP 1/13/2012 CHECK № 031740
31740

FUND & ACCOUNT		DESCRIPTION	AMOUNT
300.5100.027	#1	COMMENCE-PELLET BOILER INSTALLATION	$25,000.00
		TOTAL	$25,000.00

185-12

BONNETTE, PAGE & STONE CORPORATION
91 BISSON AVENUE, LACONIA, NH 03246
TEL: 603. 524. 3411 FAX: 603. 524. 4641

General Contractors, Construction Managers for Design/Build of Public and Private Buildings

INVOICE

January 11, 2012

Att: Commissioners
Carroll County
Office of Commissioners, Admin Bldg
95 Water Village Road, PO Box 152
Ossipee, NH 03864

Re: Invoice # 1

Dear Commissioners,

The following is an invoice for the work on the pellet boiler system for the Mountain View Nursing Home Project. This invoice includes startup costs. The requisitions that follow will be on a monthly basis as outlined in the contract.

Mountain View Nursing Home Pellet Boiler Support Work…

Total Contract to Date:	$ 375,000.00
Start up invoice	$ 25,000.00
Amount remaining to invoice	$ 350,000.00
Total amount now due …	**$ 25,000.00**

Should you have any questions, please do not hesitate to contact our office.

Thank you,

We appreciate your business.

185-12
#1

PRELIMINARY - for discussion 2017.03.31

COUNTY of CARROLL
95 Water Village Road
P.O. Box 152
Ossipee, NH 03864-0152

New Hampshire

54-7
114

№ 032535

CHECK NO.
32535

DATE		AMOUNT
04/20/2012	32535	$207,500.00

TWO HUNDRED SEVEN THOUSAND FIVE HUNDRED AND 00/100 DOLLARS

PAY
TO THE
ORDER OF

BONNETTE, PAGE & STONE CORP.
91 BISSON AVENUE
LACONIA NH 03246

TREASURER

COMMISSIONER

COMMISSIONER

⑈032535⑈ ⑆011400071⑆ 924204601 2⑈

COUNTY of CARROLL, 95 Water Village Road, P.O. Box 152, Ossipee, NH 03864-0152

VENDOR 003627 BONNETTE, PAGE & STONE CORP. 04/20/2012 CHECK № 032535 32535

FUND & ACCOUNT	P.O.#	INVOICE	DESCRIPTION	AMOUNT
300.5100.027		#2 THRU MARCH	PROG#2-PELLET SYS	207,500.00
			TOTAL	207,500.00

BONNETTE, PAGE & STONE CORPORATION
91 BISSON AVENUE, LACONIA, NH 03246
TEL: 603. 524. 3411 FAX: 603. 524. 4641

General Contractors, Construction Managers for Design/Build of Public and Private Buildings

INVOICE

March 31, 2012

Att: Commissioners
Carroll County
Office of Commissioners, Admin Bldg
95 Water Village Road, PO Box 152
Ossipee, NH 03864

Re: Invoice # 2-Thru 3/31/12

Dear Commissioners,

The following is an invoice for the work on the pellet boiler system support work for the Mountain View Nursing Home Project. This invoice includes all progress work thru 3/31/12.

Mountain View Nursing Home Pellet Boiler Support Work…

Total Lump Sum Contract to Date:	$ 375,000.00
Total completed & stored to date (contract 62% as of 3/31)	$ 232,500.00
Less previous invoice # 1	$ 25,000.00
Current payment due	**$ 207,500.00**
Balance to finish	$ 142,500.00
Total amount now due …	**$ 207,500.00**

Should you have any questions, please do not hesitate to contact our office.

Thank you,

We appreciate your business.

PRELIMINARY - for discussion 2017.03.31

COUNTY of CARROLL
95 Water Village Road
P.O. Box 152
Ossipee, NH 03864-0152

New Hampshire

54-7
114

№ 032930

CHECK NO.
32930

DATE		AMOUNT
06/08/2012	32930	$135,500.00

ONE HUNDRED THIRTY FIVE THOUSAND FIVE HUNDRED AND 00/100 DOLLARS

PAY
TO THE
ORDER OF

BONNETTE, PAGE & STONE CORP.
91 BISSON AVENUE
LACONIA NH 03246

TREASURER

COMMISSIONER

COMMISSIONER

⑈032930⑈ ⑆011400071⑆ 9242046012⑈

COUNTY of CARROLL, 95 Water Village Road, P.O. Box 152, Ossipee, NH 03864-0152

VENDOR 003627 BONNETTE, PAGE & STONE CORP. 06/08/2012 CHECK № 032930
32930

FUND & ACCOUNT	P.O.#	INVOICE	DESCRIPTION	AMOUNT
300.5100.027		3 THRU 5/29/12	PROG-PELLET SUPPO	135,500.00
			TOTAL	135,500.00

BONNETTE, PAGE & STONE CORPORATION
91 BISSON AVENUE, LACONIA, NH 03246
TEL: 603. 524. 3411 FAX: 603. 524. 4641

General Contractors, Construction Managers for Design/Build of Public and Private Buildings

INVOICE

May 29, 2012

Att: Commissioners
Carroll County
Office of Commissioners, Admin Bldg
95 Water Village Road, PO Box 152
Ossipee, NH 03864

Re: Invoice # 3-Thru 5/29/12

Dear Commissioners,

The following is an invoice for the work on the pellet boiler system support work for the Mountain View Nursing Home Project. This invoice includes all progress work thru 5/29/12.

Mountain View Nursing Home Pellet Boiler Support Work…

Total Lump Sum Contract to Date:	$ 375,000.00
Total completed & stored to date	$ 375,000.00
Less previous invoice # 1	$ 232,500.00
Current payment due	**$ 142,500.00**
Total amount now due …	**$ 142,500.00**
	<7,000.00>
	135,500

5% hold

Should you have any questions, please do not hesitate to contact our office.

Thank you,

We appreciate your business.

~~Trade~~ - Ad
hold 5%
$ 7,000
$ 135,500

ENTERED

COUNTY OF CARROLL
95 Water Village Road
P.O. Box 152
Ossipee, NH 03864-0152

New Hampshire

54-7
114

№ 032182

CHECK NO.
32182

DATE		AMOUNT
03/09/2012	32182	$50,400.00

FIFTY THOUSAND FOUR HUNDRED AND 00/100 DOLLARS

PAY
TO THE
ORDER OF

BONNETTE, PAGE & STONE CORP.
91 BISSON AVENUE
LACONIA NH 03246

TREASURER

COMMISSIONER

COMMISSIONER

⑈032182⑈ ⑆011400071⑆ 924204601 2⑈

COUNTY OF CARROLL, 95 Water Village Road, P.O. Box 152, Ossipee, NH 03864-0152

VENDOR 003627 BONNETTE, PAGE & STONE CORP. 03/09/2012 CHECK № 032182 32182

FUND & ACCOUNT	P.O.#	INVOICE	DESCRIPTION	AMOUNT
300.5100.027		OCT 24, 2011	PIPING-PELLET BOIL	50,400.00
			TOTAL	50,400.00

BONNETTE, PAGE & STONE CORPORATION
91 BISSON AVENUE, LACONIA, NH 03246
TEL: 603. 524. 3411 FAX: 603. 524. 4641

General Contractors, Construction Managers for Design/Build of Public and Private Buildings

INVOICE

October 24, 2011

Att: Commissioners
Carroll County
Office of Commissioners, Admin Bldg
95 Water Village Road, PO Box 152
Ossipee, NH 03864

Re: UG Piping for Pellet Boilers

Dear Commissioners,

The following is an invoice for the work to date on the underground piping for the pellet boiler system for the Mountain View Nursing Home Project. This invoice is for the ug piping work to date between the old nursing home and the new Mountain View Community Facility.

Mountain View Nursing Home

Materials, labor and equipment provided…	
Denron, Plumbing and Heating	$ 48,000.00
CM Fee	$ 2,400.00
Total	$ 50,400.00
Total amount now due …	**$ 50,400.00**

Should you have any questions, please do not hesitate to contact our office.

Thank you,

We appreciate your business.

Pay per KC

166-11

BIOMASS commodities corporation

227 Adams Road
Williamstown, MA 01267
Office (413) 458-5326
Fax (413) 458-8275
info@biomasscommodities.com

Carroll County NH
95 Water Village Road
Ossipee, NH 03864
September 14, 2010
Project: Mountain View Nursing Home – Wood Pellet Boilers

AGREEMENT BETWEEN SELLER AND BUYER

Terms:

These terms and conditions will be applicable to the Buyer's purchase from Biomass Commodities Corp. (Seller). The Seller's offer to the Buyer is expressly conditioned upon the Buyer's acceptance of these terms and conditions and the Seller herby gives notice that it objects to any additional or different terms in the Buyer's documents. This document and others specifically identified as part of the Seller's proposal constitute the entire agreement and may not be modified except by written amendment signed by the Seller. The Buyer's order or payment shall constitute acceptance of the proposal and these terms and conditions.

Price and Payment Terms:

The Buyer agrees to pay the contract price as stated in the attached proposal. Where applicable, the Buyer agrees to pay for the additional items below, unless specifically included in the contract price:

All sales, use or similar taxes or charges and custom duties.

Freight, transportation, demurrage, insurance, extraordinary packaging requirements, COD charges, storage, handling at site, etc.

A service fee for any invoices not paid within 30 days after invoice, calculated at 1-1/2% per month of the outstanding balance, plus, reasonable and necessary collection costs incurred by the Seller, including attorney fees and litigation expenses.

The price of additional equipment, services and charges necessary to complete the project made necessary by incomplete or inaccurate information supplied by the Buyer, or due to the Buyer's changes or delays. Seller will advise Buyer in advance of any such additional charges.

A Portion of the fixed contract price shall be invoiced at specific milestones or a time and materials project shall be invoice bi-weekly. The Seller shall be invoiced as follows:

40% on order (with submission of signed contract)
50% upon delivery (net 30 days)
10% at startup, no later than 45 days after delivery (net 30 days)

BIOMASS
commodities corporation

227 Adams Road
Williamstown, MA 01267
Office (413) 458-5326
Fax (413) 458-8275
info@biomasscommodities.com

Seller may, at its options, require additional progress payments if the financial condition of the Buyer does not justify continuation of the project on the specified payment terms. In addition, Seller shall have right at any time in the case of poor financial condition or breach to withhold or recall shipments, in whole or part, and repossess all goods supplied and stored at the Seller's facility without the necessity of taking any other proceedings. Buyer consents that the goods so taken shall become the property of the Seller, provided that the Buyer is promptly notified, and is given full credit therefore. The Seller reserved a security interest in all equipment and software licenses until the full payment of the purchase price.

Deliveries:

Delivery dates are approximate. Delivery method and route are at the Seller's discretion unless Buyer supplies other instructions. Unless otherwise stated, mechanical installation is not included in this agreement. Unless otherwise stated, deliveries shall be FOB place of shipment, and risk of loss shall pass to the Buyer on delivery to the carrier. If Buyer delays delivery and Seller is required to store the equipment, the Buyer's liability for risk of loss, storage charges and payment of the contract price shall commence when the equipment is ready for shipment.

Termination and Cancellation:

In the event that the Buyer cancels all or part of this agreement, Seller shall be entitled to recover its total costs, including general overhead and profits for the work performed. Seller shall apply contract payments received to its costs, and be given immediate access to Buyer's facilities to recover shipped materials.

Warranty:

Unless otherwise stated, Biomass Commodities standard warranty is Twenty-Four (24) months. For the benefit of the user, Seller warrants all new equipment manufactured by Seller to be free from defects in material and workmanship; and will replace or repair, F.O.B. at its factories or other location designated by it, any part or parts returned to its which Sellers examination shall show to have failed under normal use and service by the original user within Twenty-Four Months of equipment startup (not to exceed 45 day after delivery). Such repair, replacement and labor for said repair and replacement shall be free of charge for all items except those items that are consumable and normally replaced during maintenance. Sellers obligation under this warranty is conditioned upon its receiving prompt notice of claimed defects which shall in no event be later than thirty (30) days following expiration of the warranty period; and is limited to repair or replacement as of aforesaid.

This warranty is expressly made by seller and accepted by the purchaser in lieu of all other warranties, including warranties of merchantability and fitness for particular purpose, whether written, oral, expressed, implied, or statutory. Seller neither assumes nor authorizes any other person to assume for it any other liabilities with respect to its equipment. Seller shall not be liable for normal wear and tear not any contingent, incidental or consequential damage or expense due to partial or complete inoperability of its equipment for any reason whatsoever.

Warranty shall not apply to equipment of parts thereof, which have been altered or repaired outside of Sellers factory or damaged by improper installation or application, or subjected to misuse, abuse,

BIOMASS commodities corporation

227 Adams Road
Williamstown, MA 01267
Office (413) 458-5326
Fax (413) 458-8275
info@biomasscommodities.com

neglect or accident. Warranty is contingent upon buyer maintaining all routine service per manufacturer requirement. This warranty applies only to equipment made or sold by Seller. Seller makes no warranty with respect to parts, accessories, or components provided by others.

Seller's Proprietary Rights:

The Seller, its suppliers and principals retain ownership of and copyright to software and hardware designs, specifications, and technical information and Buyer hereunder receives a license to use said software and hardware designs, specifications and technical information solely for purposes of this contract. Any proprietary data or trade secret information of the Seller, its suppliers and principals disclosed to the Buyer will be retained in confidence and used only in connection with this Agreement, unless such data or information can be shown to have been known to Buyer from other sources that have lawfully obtained such information and conveyed it to Buyer.

Patents:

Seller represents and warranty only that it has no knowledge of adversely held, potentially enforceable rights of any third parties which would be infringed by any hardware or software or any part thereof supplied by Seller, If an item or any part thereof is enjoined, Seller may at its option either (a) procure for Buyer the right to continue using said item or part, (b) modify it so as to become non-infringing, (c) replace it with a functionally equivalent, non-infringing item, or (d) re-design the system to meet essentially the same specification by other means, In no event shall the Seller's liability for any infringement exceed the purchase price thereof. The foregoing states the entire liability of the Seller for patent infringement. The foregoing shall not apply to any product manufactured to the Buyer's specification, and its use with hardware or software not supplied by the Seller herein. If any part is sold, licensed or supplied based on the Buyer's specification, the Buyer shall hold the Sellers harmless of any claim patent infringement.

General:

This agreement shall be governed by the laws of the State of Massachusetts, USA. Any dispute or controversy between Seller and Buyer involving the services and/or terms of this agreement shall be settled by arbitration to be held in the City of North Adams, State of Massachusetts. Any arbitration proceedings pursuant to this Section shall be conducted on an expedited basis. The arbitration order shall be a final order and not appealable. The arbitration costs for filing fee shall be equally split between Seller and Buyer.

The Buyer may not assign this agreement without seller's written consent.

Contract total, per Proposal dated 9/14/2010: **$325,405.00**

Approved	Approved
Biomass Commodities Corporation	Carroll County
_____	David Sorensen
_____	Nov 3, 2010
Date	Date

BIOMASS

227 Adams Road
Williamstown, MA 01267
Office (413) 458- 5326
Cell (207) 576-3490
charlie@biomasscommodities.com

September 14, 2010

Carroll County NH
95 Water Village Road
Ossipee, NH 03864

We appreciate your continued interest in Biomass Commodities' offerings and AbioNova's D'Alessandro boiler package. We have reviewed this project in close detail with the design team and equipment sales company in order to provide you with the most competitive bid possible. We look forward to continuing with the project at the Mountain View Nursing Home.

I would like to point out is the fact that our offer for the following boilers, with combined heat output of 800 kW, is 6-7% larger than that being proposed by our competition. BCC has provided our most aggressive price structure to the revised two boiler package to remain competitive for this project. Not only that, BCC has added features that have been rolled into this package beyond our original scope of supply, to sweeten our offer.

Based on the criteria set forth by McGill Engineering and the grant funding received by Carroll County, Biomass Commodities would propose the following options for pellet boilers and fuel storage:

1024 MBH (300kW) + 1707 MBH (500kW) AbioMax Wood Pellet Boilers.....$ 293,362
34-ton Schuld/Bushnell, Galvanized, Painted Steel (recommended).....$ 32,043

We believe you will benefit from choosing our equipment for the following reasons:

- Biomass Commodities has more pellet fired heating systems of the proposed size than any competitor in the North east states
- BCC's experience and ability to manage, deliver, and complete projects timely and within budget
- BCC's product guarantee and provision of quality, local, and timely service
- ABioNova is a highly successful and experienced pellet boiler installation firm in a country leading the world in these technologies

Please review the following information, and we will look forward to working with you and answering any questions you may have about our offer.

Sincerely,
Charles Agnew
Biomass Commodities Corp.
207-576-3490

BIOMASS
commodities corporation

227 Adams Road
Williamstown, MA 01267
Office (413) 458- 5326
Cell (207) 576-3490
charlie@biomasscommodities.com

Addendum to Biomass Commodities' Pellet Boiler Proposal Dated 9/14/2010
To: Carroll County Commissioners
Re: Boiler Startup Commitment
Date: September 21, 2010

This Addendum #1 is to address the concern with the commissioning and startup of the wood pellet boilers proposed for the Mountain View Nursing Home. Since the equipment is expected to arrive and installation completed just before the summer season of 2011, it is likely that building conditions will not support a fully-fired tuning and commissioning of the proposed pellet boilers at this time. Biomass Commodities Corp (BCC) does expect to have the system ready to operate however, as soon as all trades and preparation tasks can be coordinated. It may be possible to run the boilers for domestic hot water production during the summer months, 2011.

This Addendum #1 is to make particular note to the fact that it is our intention to fire, tune, and complete the pellet boiler commissioning at a later date in 2011, when there is a significant building heat load to warrant this work. This will include, at a minimum, a visit during the fall to assist and train operators to startup the boilers, as necessary, as well as another visit to tune and observe boiler operation at a time when the boilers are expected to be near or at full output. As noted in the proposal, four visits are provided with the sale of this equipment for purposes of operator training, and to see that these boilers do operate at their peak efficiency.

It is BCC's intention to see all our pellet boiler installations are successful. It should be noted that many customers request BCC's annual services for startup, tuning, and commissioning in the first years of ownership, at a minimum.

Please direct any further concerns or comments to me at the number or email below.

Sincerely,

Charlie Agnew
Technical Sales, Service
Biomass Commodities Corp.
207-576-3490 – cell
charlie@biomasscommodities.com

BIOMASS COMMODITIES CORPORATION

227 Adams Road
Williamstown, MA 01267
Office (413) 458- 5326
Cell (207) 576-3490
charlie@biomasscommodities.com

AbioNova's AbioMax -Standard Pellet Boiler Equipment Details

Hot Water Solid Fuel Boiler:

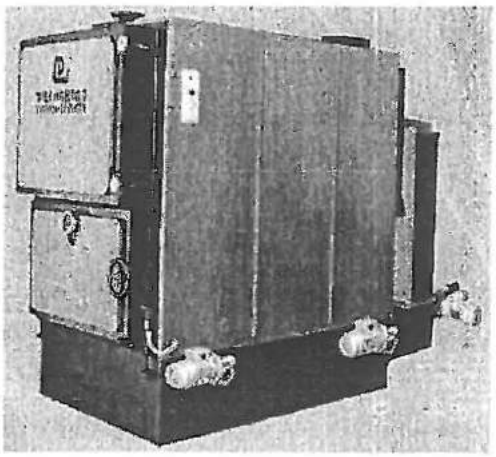

- Designed by D'Alessandro Termomeccanica of Miglianico, Italy
- Manufactured in Wisconsin, USA
- Three pass horizontal fire tube boiler
- Steel construction
- Automated soot blowers + compressor included
- Built to ASME Section IV Requirements
- Efficiency up to 92% LHV

Under-Fed Stoker System:

- Manufactured by D'Alessandro Termomeccanica
- Durable, fixed cast chrome steel burner grates
- Rotary airlock, actuated sluice, and water suppression systems for burn back protection
- Ash removal augers for firebox maintenance
- Variable speed controlled combustion air fans for both primary and secondary air

Boiler Controls:

- Built by ABioNova, Stenkullen, Sweden
- PLC-based controls, UL listed construction
- Integrates all boiler and stoker controls, operation, and safety controls, and alarm notifications
- O2 monitoring cell and controls regulates fuel feed and boiler output
- Modulating 2-step control, 10-100%
- Web-based interface with email alerts, remote monitoring, etc. *(requires Ethernet connection)*

Project Management

- Site visits and site coordination
- AutoCad capabilities for equipment arrangement
- Scheduling and contractor support

Service, Training & Support:

- Full system training after startup included; tech visits once a week for four weeks
- **2-Year Parts & Service Warranty (Service Agreement required for year 2)**
- Service Agreements offered & tailored to customer needs **(example attached)**

Installation:

- Boiler placement and equipment assembly
- Silo placement, erection, and fuel conveyance installation
- Commissioning, start up and initial tuning **(including visit by a factory technician)**

Added System Features:

- **Touch Screen Boiler Control (easy to navigate, user interface)**
- **GSM Alarm (includes installation and setup)**
- **GSM Alarm Access (send a text message and the control will answer with a status message)**
- **Web Access with Firewall Protection (access the NovaReg Control via secure internet connection)**
- **UPS Battery Backup (system can run through short power interruption)**
- **THESE ADDITIONAL FEATURES HAVE BEEN INCLUDED BY BCC/ABIONOVA AT NO EXTRA COST, AND CARRY A RETAIL VALUE OF $19,600**

BIOMASS commodities corporation

227 Adams Road
Williamstown, MA 01267
Office (413) 458-5326
Cell (207) 576-3490
charlie@biomasscommodities.com

Boiler Pricing:

ABioNova AbioMax Wood Pellet Boilers:	*$293,362*
AbioMax 300kW	Included
With Single cyclone	Included
AbioMax 500kW	Included
With Multiple Cyclone	Included
Boiler Ash Removal Augers w/ Controls Integration	Included
Operating & Safety Controls, Integrated	Included
Installation, Startup, & Owner Training	Included
Two Control Panels: NovaReg, O2 Trim Control, Touch Screens	Included
Fully Modulation Firing Rate Controls	Included
UPS Battery Backup System	Included
Two Year Parts and Service Warranty	Included
10-Ton Fuel Delivery	Included
Freight	Included
TOTAL	**$293,362**

Commercial Pellet Boiler - Storage Silo Options

(all silos provided with ladder, safety cage, pneumatic and top fill capacity, prices include fuel conveyance)

Schuld/Bushnell 34.6-ton

- Galvanized Plus Steel, welded construction
- Finish is an epoxy prime and polyester paint (white)
- 10' diameter, 30' 7" overall height, 60 degree bottom
- 1730 cu ft usable capacity (34.6 ton max)

Silo Pricing:

Schuld/Bushnell 34.4 Ton Pellet Silo	*$32,043*
Fuel conveyance to burner	Included
Ladder, safety cage, level indicators	Included
Smooth walled, painted galvanized steel (white)	Included
10-Ton Initial Fuel Delivery	Included

BIOMASS
commodities corporation

227 Adams Road
Williamstown, MA 01267
Office (413) 458-5326
Cell (207) 576-3490
charlie@biomasscommodities.com

Terms

- 40 % on order, 50% upon delivery, 10% at startup (no later than 45 days after delivery)
- **BCC/AbioNova assume rights to publish equipment photos and use this installation as a demonstration project. This may include giving tours to potential customers and others with reasonable notice and during business day hours, when reasonably convenient for the owners.**

Delivery of Equipment

- AbioNova Equipment: **12-14 weeks**

Miscellaneous Exclusions

- BCC has not included costs associated with any permits, fees, bonds, and penalties not specifically stated
- BCC has not included costs for receipt, ~~insurance, storage,~~ or unloading of equipment **(BCC is under the assumption that BPS can lend equipment for one day unloading the equipment at the customer's facility. If equipment is not available, the equipment rental fee will be charged ($3-4k directly to the customer.)**
- BCC has not included costs for silo foundations~~, or a crane for erection~~
- ~~BCC has not included costs associated with emissions permitting~~
- BCC has not included costs associated with concrete work, design, modifications, etc
- BCC has not included costs for breaching or the stack downstream of the supplied equipment
- BCC has not included any costs associated with boiler house construction or modifications
- BCC is not responsible for plumbing to and from the boiler systems, or any water distribution between the existing or new boilers
- BCC is not responsible for control wiring or power supply beyond our supplied control panels as noted in the Bid Invitation
- BCC requires a domestic water supply in the boiler house for the fire suppression systems
- BCC requires mechanical contractors to complete installation of black iron piping for soot blowers
- BCC requires at least two trained boiler operators to manage boiler plant operations
- BCC is not responsible for the stack, or stack sizing to meet Air Dispersion requirements
- Buildings, platform for tube cleaning, structures such as stairways that will be considered part of the building, sprinklers, lighting, electrical outlets, or anything not specifically listed in scope of supply

Wood Pellet Maintenance Requirements

1. Burner raking every 1-14 days, 10-30 min.
2. Empty firebox ash receptacle every 1-3 days, 10 min.
3. Empty multi-clone receptacle every 1-7 days, 10 min.
4. Blow off compressor condensate every week 5 min.
5. Manual brushing and inspection of the boiler and air heater tubes will be required once per year (during off season). The time spent on this task does depend on skill but 4-8 hours should be expected.

Gearbox oil levels will require inspection and topping off once a year during the off season. This will require 1-2 hours per year of labor. ID Fan belt tensions and/or replacement should be done once per year and will require ½ hour of labor. Oxygen sensors and draft monitoring equipment will need to be blown clean of any ash buildup. NH DEP may require additional checks and inspections of emissions control systems (multi cyclone) which are typically done annually or semi annually.

BIOMASS
commodities corporation

227 Adams Road
Williamstown, MA 01267
Office (413) 458- 5326
Cell (207) 576-3490
charlie@biomasscommodities.com

Attachments

1. **Mountain View Nursing Home (drw 1)**
   This drawing shows a proposed layout for the MVNH pellet boiler room with AbioMax 300 + 500 kW boilers. Shown is a possible configuration of the two boilers, multi-cyclones, and ash collection system

2. **BOILER CS300_SWEDISH HOPPER**
   This drawing shows dimensions, technical details, and configuration of the CS 300

3. **BOILER CS500_SWEDISH HOPPER**
   This drawing shows dimensions, technical details, and configuration of the CS 300

4. **AGREEMENT BETWEEN BUYER AND SELLER**

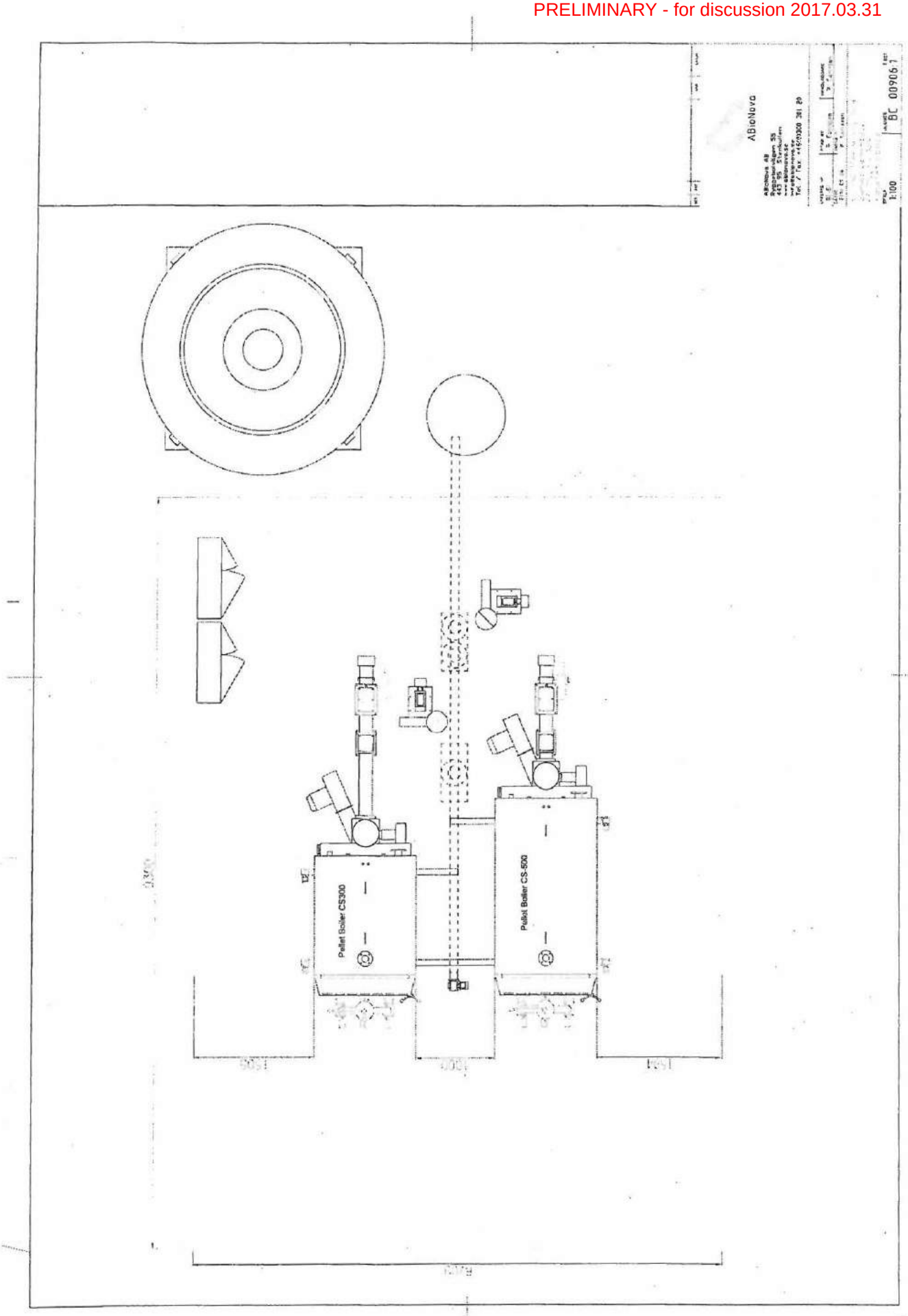
Pellet Boiler CS300
Pellet Boiler CS-500
ABioNova
1:100
BC 009061

D'ALESSANDRO TERMOMECCANICA

TECHNICAL FEATURES AND DIMENSION BOILER mod. CS300

Documento n°/Document n°

revisione n°/revision n° emesso il/ issued

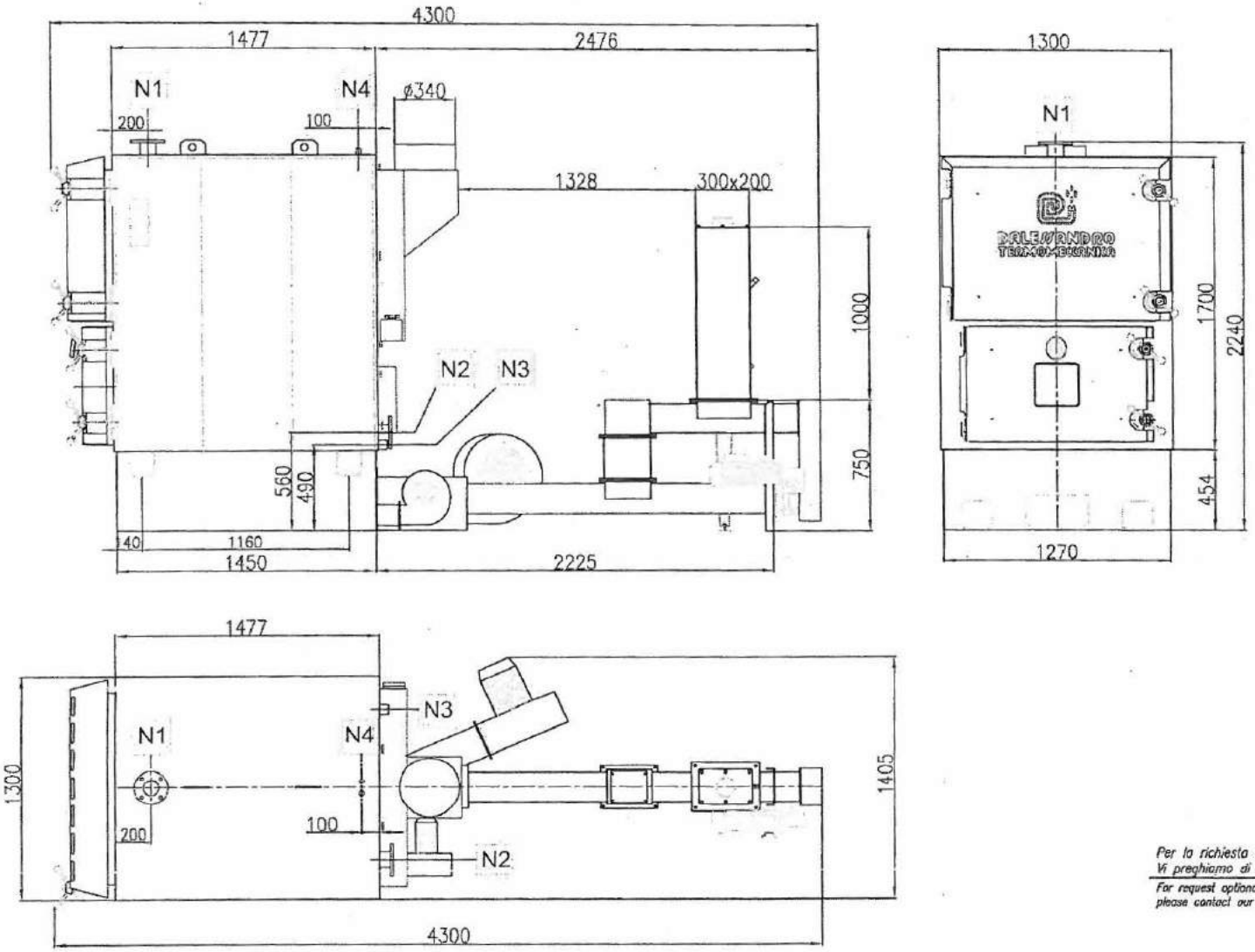

DATI TECNICI
TECHNICAL FEATURES

potenza nominale *nominal output*	(Kw)	300
potenza al focolare *firebox output*	(Kw)	353
pressione max esercizio *max operating pressure*	(bar)	2.9
pressione di prova idraulica *idraulic test pressure*	(bar)	4.5
temperatura max esercizio *max operating temperature*	(°C)	110
tensione di rete *net tension*	(V)	380
assorbimento utenze elettriche * *absorption users electrical workers*	(Kw/h)	2.4
consumo combustibile a regime *combustible consumption at max work*	(Kg/h)	72
volume camera di combustione *volume combustion chamber*	(dcm³)	800
contenuto acqua caldaia *water boiler contained*	(Lt.)	1015
volume tramoggia *max capacity hopper*	(dcm³)	60
massa a vuoto caldaia (tolleranza ± 5%) *max weight (tolerance ± 5%)*	(Kg)	2400
diametro camino fumi *flue diameter caminey*	(mm)	340
portata fumi *smoke range*	(Nm³/h)	886

Combustibili utilizzabili: pellets, sansa di olive gusci e noccioli di frutta triturata ed altri combustibili di origine biologica

Usable combustibles: pellets, olive husks, crushed shell and fruit stones and another biogenic fuels

ELENCO ATTACCHI
NOZZLE LIST

N1	mandata *outlet water*	(DN)	80
N2	ritorno *inlet water*	(DN)	80
N3	manicotto di drenaggio *drainage water*	(DN)	25
N4	entrata/uscita dissipatore di calore *inlet/outlet heat exchange*	(DN)	15

* caldaia senza accessori
boiler without optional

DWG FORMAT DRAWING SCALE 1:1

Per la richiesta di accessori e personalizzazioni o altre informazioni Vi preghiamo di contattare il nostro Ufficio Commerciale

For request optional and customization or other information please contact our Commercial Office

D'ALESSANDRO TERMOMECCANICA

TECHNICAL FEATURES AND DIMENSION BOILER mod. CS500

Documento n°/Document n°

revisione n°/revision n° emesso il/ issued

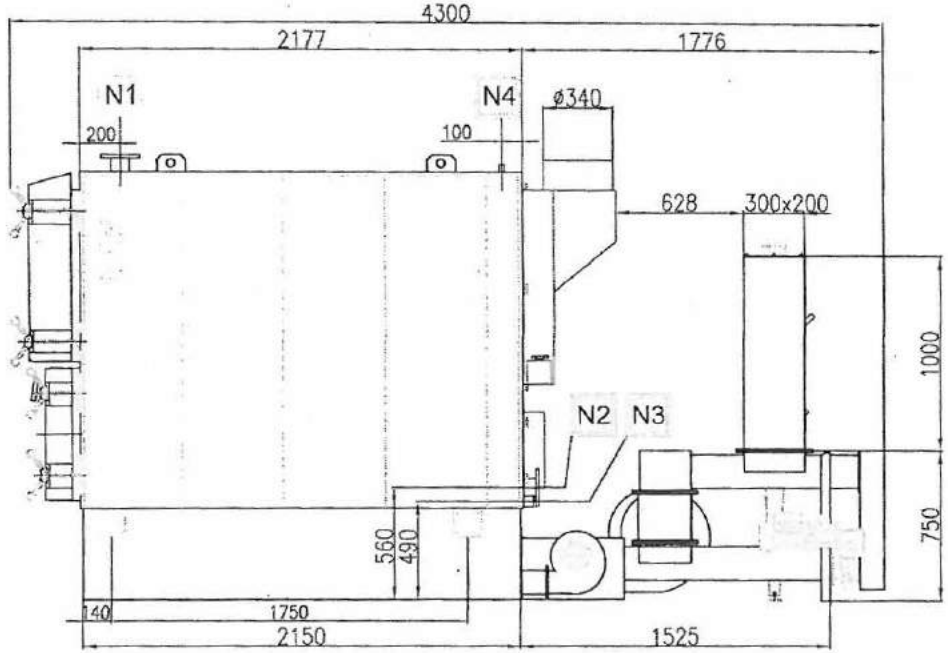

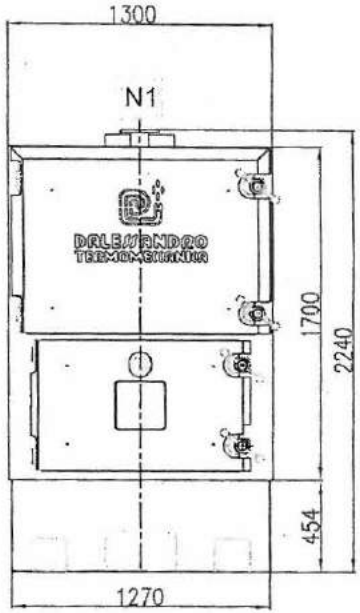

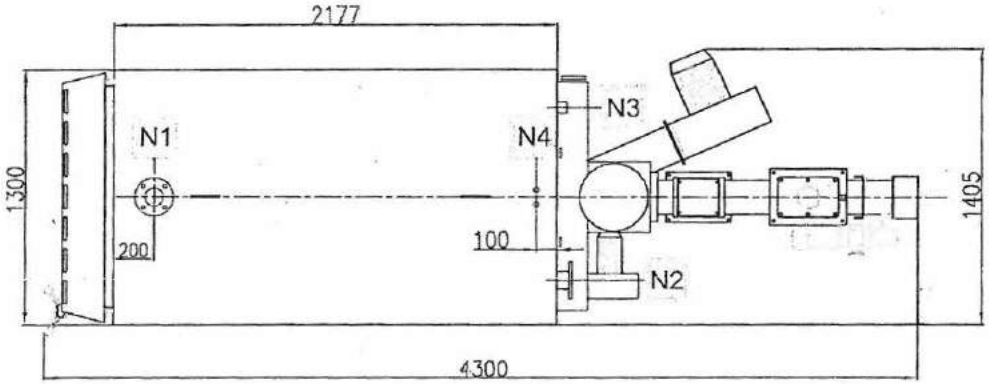

DATI TECNICI
TECHNICAL FEATURES

potenza nominale *nominal output*	(Kw)	500
potenza al focolare *firebox output*	(Kw)	588
pressione max esercizio *max operating pressure*	(bar)	2.9
pressione di prova idraulica *idraulic test pressure*	(bar)	4.5
temperatura max esercizio *max operating temperature*	(°C)	110
tensione di rete *net tension*	(V)	380
assorbimento utenze elettriche * *absorption users electrical workers*	(Kw/h)	2.4
consumo combustibile a regime *combustible consumption at max work*	(Kg/h)	120
volume camera di combustione *volume combustion chamber*	(dcm^3)	1195
contenuto acqua caldaia *water boiler contained*	(Lt.)	1485
volume tramoggia *max capacity hopper*	(dcm^3)	60
massa a vuoto caldaia (tolleranza ± 5%) *max weight (tolleranze ± 5%)*	(Kg)	3100
diametro camino fumi *flue diameter cominey*	(mm)	340
portata fumi *smoke range*	(Nm^3/h)	1478

Combustibili utilizzabili: pellets, sansa di olive gusci e nocciali di frutta triturata ed altri combustibili di origine biologica

Usable combustibles: pellets, olive husks, crushed shell and fruit stones and another biogenic fuels

ELENCO ATTACCHI
NOZZLE LIST

N1	mandata *outlet water*	(DN)	80
N2	ritorno *inlet water*	(DN)	80
N3	manicotto di drenaggio *drainage enter*	(DN)	25
N4	entrata/uscita dissipatore di calore *inlet/outlet heat exchange*	(DN)	15

* caldaia senza accessori
boiler without optional

DWG FORMAT DRAWING SCALE 1:1

Per la richiesta di accessori e personalizzazioni o altre informazioni Vi preghiamo di contattare il nostro Ufficio Commerciale

For request optional and customization or other information please contact our Commercial Office

PRELIMINARY - for discussion 2017.03.31

Carroll County Commissioners Meeting

Minutes

November 3, 2010

Commissioners Present: Chip Albee, David Sorensen, Dorothy Solomon

Public: David Babson, Daymond Steer, Ed Comeau, Maureen Spencer, Henry Spencer, Asha Kenney

Meeting called to order at 8:15 am by Commissioner Sorensen

Public Input

1. Babson: The Cooperative Extension will be interviewing the final 4 candidates on the 9th. Three of them are from this state and the other one is from out of state. Three of them are employed by the university system. Asks if anything has been done with the old nursing home in regards to the Cooperative Extension.

2. Com. Sorensen: I have asked somebody to help put together an RFP to get that out.

3. Com. Albee: With looking at the rental figure, it's the equivalent of $650,000 worth of debt, I think we should think about putting $500,000 into a capital budget to get rid of that rent and save some money for this year's budget.

4. Daymond: Asks if the Commission has anything to say about the outcome of the election.

5. Com. Sorensen: The people spoke.

6. Com. Albee: I will make my comments on the election as we go forward from now until January. There will be plenty of comments out of me.

Minutes

Corrections for 10/27/10 minutes: Page 2, should read "on site", not "in site".

MOTION: Commissioner Albee moves to approve the minutes of 10/27/10 as corrected. Commissioner Solomon seconds this motion. So voted.

Reports

1. Com. Sorensen: We need to make a decision on the siding for the building. I went to the meeting yesterday and think we all have decided to go with the siding that was displayed on

the left side. The other item regarding the building is that they only had 3 people working on the yellow siding and they are going to go to the subcontractor and say that they want more people working on that. There is a screen going into the multipurpose room on the kitchen side of the room. It is an electronic screen. Rob Horace was at the meeting and he recommended taking down reducing the cabinets that are in the café area and putting in his garbage containers in that area. He also wants a digital menu board. He also talked about wireless connections and where they will be located.

I got a call a couple of days ago. There is a fund being set up for Steve Eldridge and his family at Meredith Village Savings Bank in Moultonborough. It was put together by Peter Hoage who's wife is Steve's sister. He wanted it to be known county wide about this. Steve was a maintenance supervisor at the nursing home. He had surgery and has been out of work since that time. He is waiting for more doctor recommendations. He is due to lose his house and is in a real bad financial situation. I will check to see if we can put this information on our website.

2. Com. Solomon: This information can be put into the nursing home newsletter which is posted on the website.

Jerry Gagne, Administration Building - Preliminary Budget

1. Jerry: Copy of the budget is given to the Commissioners. We have done well this year. We have had no big issues with equipment.

2. Com. Albee: We should review the Energy Audit before final budget is presented.

3. Jerry: Overall budget is down $3,000. There have been some increases in contract fees. I don't foresee any major problems with equipment. The generator has been working well and is well maintained throughout the year. No new equipment is needed.

MOTION: Commissioner Albee moves to sign the contract with Biomass Commodities Corporation for $325,405.00. Commissioner Solomon seconds this motion. So voted.

Robin Reade - Human Resources - Preliminary Budget

1. Robin: Copy of budget is given to the Commissioners. There are not a lot of changes to the budget. Health insurance has increased. We haven't filled in the IT lines yet. Last year, we spent approximately $1,000 on employee recognition with ceremony and pins, etc. I am not quite sure where I should be taking that out of. Last year, it came out of education and conferences. We are looking to revamp the website. I am looking into moving it over to Virtual Town Hall. They do a really good job. Belknap is using this. Yearly maintenance and hosting is going to be $2,800. We thought about taking it out of advertising. When I do advertising for this building and advertising in conjunction with anything to this building, it gets billed to my budget. The nursing home, jail and sheriff's department have separate advertising. You had talked at one point about pulling all of that advertising into my budget. If we end up doing that, is that going to be enough? I got the estimates for IT this week. Cybertron and Kronos are included in this.